ebmpapst FAN COIL FANI

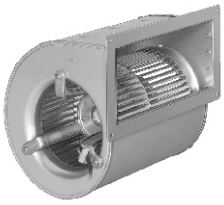

D4E 133-DH61-C6

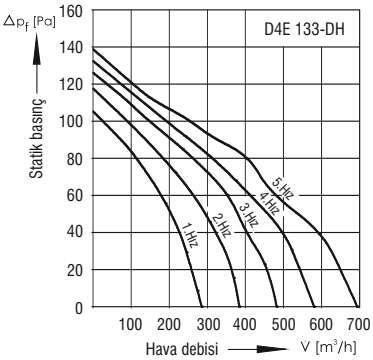

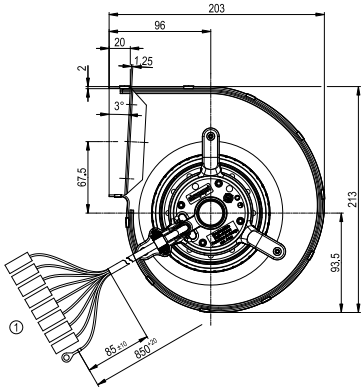

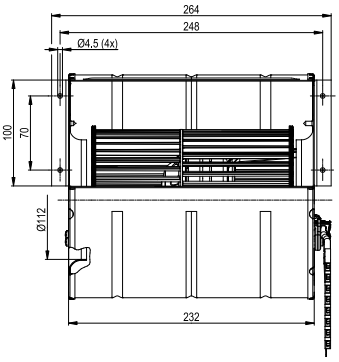

ebmpapst RADYAL FAN COIL FANI TEKNİK VERİ TABLOSU

Tip	Voltaj V	Frekans Hz	Hava Debisi m^3/h	Devir min^{-1}	Giriş Gücü W	Akım A	Kapasitör μF / VDB	Gürültü Seviyesi dBA	Sıcaklık ^0C	İzolasyon Sınıfı	Ağırlık Kg
D4E 133-DH61-C6	230	50	695	930	80	0,36	2,0 / 400	54	-25..+55	B	2,6

ebmpapst RADYAL FAN (GERİYE EĞİK SEYREK KANATLI)

R2E - R4E

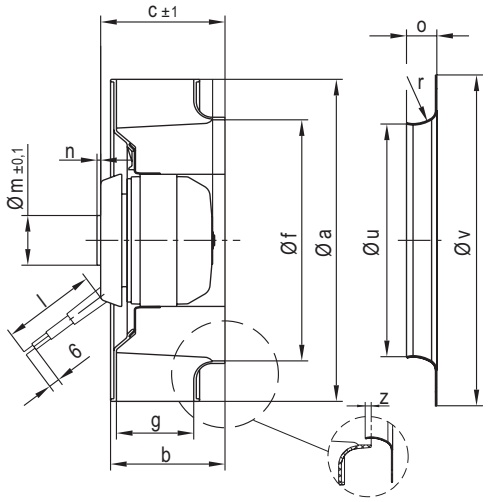

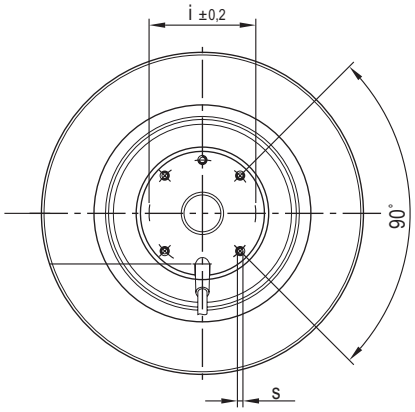

Tip	Motor	a	b	c	f	g	İ	l	m	n	o	s	r r^1/r^2	u	v	z
R2E 133-BH66-05	M2E 052-BF	133	60,6	91,0	92,8	41,0	58	300	---	---	13	M4	7	87,0	129	2
R2E 175-AR70-05	M2E 052-CA	175	62,2	68,5	131,0	42,0	58	450	---	---	14	M4	10	125,5	170	2
R2E 190-RA26-05	M2E 068-BF	190	62,5	68,5	132,8	44,6	58	450	27	2,0	14	M4	10	125,5	170	2
R2E 220-RB06-01	M2E 068-BF	220	63,7	71,0	161,0	44,0	58	450	27	2,0	21	M4	21	155,0	252	2
R2E 225-RA92-09	M2E 068-DF	225	88,4	99,0	153,5	44,5	58	450	27	2,0	28	M4	25	146,0	223	2
R2E 250-RA50-01	M2E 068-EC	250	85,0	99,0	172,5	56,0	58	450	27	2,0	31	M4	28	164,5	255	2
R2E 280-AE52-05	M2E 068-EC	281	81,6	125,0	191,0	50,0	58	450	27	2,0	35	M4	31	182,5	280	2
R2E 280-RB01-01	M2E074-GA	294	127,0	165,0	187,5	---	58/90	450	75	5,0	46	M4/M6	33/53/17	179,6	280	8
R4E 280-AD08-05	M4E 068-DF	281	112,0	125,0	191,0	80,0	58	450	27	2,0	35	M4	31	182,5	280	2
R4E 355-AF05-05	M4E 074-EI	355	148,5	165,5	236,5	101,5	90	450	75	5,0	60	M6	54/28	224,0	350	2
R4E 355-AG01-05	M4E 074-GA	355	173,0	190,0	236,5	126,0	90	450	75	5,0	60	M6	54/28	224,0	350	2
R4E 400-AB23-05	M4E 074-EI	404	141,0	162,0	268,0	90,0	90	450	75	5,0	66	M6	90/50/22	257,0	370	2
R4E 400-AR05-06	M4E 094-FA	404	141,0	171,5	268,0	90,0	115	600	100	5,5	66	M6	90/50/22	257,0	370	2
R4E 400-AN09-06	M4E 094-HA	404	188,0	217,5	265,5	140,0	115	600	100	5,5	66	M6	90/50/22	257,0	370	4
R4E 400-RO09-01	M4E 094-HA	420	182,0	194,0	266,0	---	115	600	100	5,5	66	M6	90/50	257,0	370	10
R4E 450-AB09-06	M4E 094-HA	454	173,5	203,5	298,0	120,0	115	600	100	5,5	75	M6	49/87/28	289,0	450	4
R4E 450-AK01-01	M4E 110-GF	485	209,0	234,0	300,0	140,0	---	800	100	5,5	75	M6	49/87/28	289,0	450	4
R4E 450-RH01-01	M4E 110-GF	485	218,0	240,0	300,0	140,0	115	800	100	5,5	50	M6	40/50/20	292,0	450	10
R4D 500-AT03-01	M4D 138-HF	505	233,0	249,0	355,0	175,0	162	1000	140	5,5	75	M10	49/87/28	342,0	470	5
R4D 500-RA03-01	M4D 138-HF	525	227,0	258,0	334,5	---	162	1000	140	5,5	75	M10	49/87/28	320,0	470	12
R4D 560-AQ03-01	M4D 138-LA	565	258,0	274,0	398,0	195,0	162	1000	140	5,5	82	M10	60/95/30	385,0	515	5
R4D 560-RB03-01	M4D 138-LA	567	253,0	289,0	418,0	---	162	1000	140	5,5	83,5	M10	50	407,0	565	18
R4D 630-AQ15-01	M4D 138-LA	635	290,0	305,5	447,0	220,0	162	1000	140	5,5	98,5	M10	72/114/37	433,0	634	6
R4D 630-RB15-01	M4D 138-LA	660	290,0	333,0	472,0	---	162	1000	140	5,5	86,5	M10	63,2/129/32,5	457,0	634	18

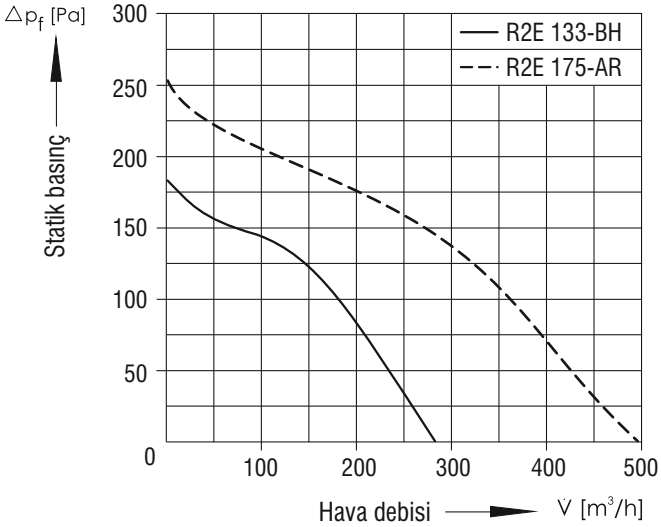
Δpf [Pa]
Statik basınç
R2E 133-BH
R2E 175-AR
Hava debisi
V̇ [m³/h]

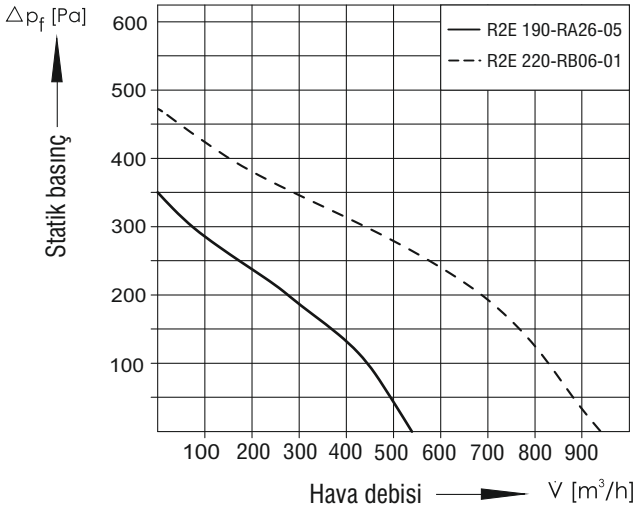
Δpf [Pa]
Statik basınç
R2E 190-RA26-05
R2E 220-RB06-01
Hava debisi
V̇ [m³/h]

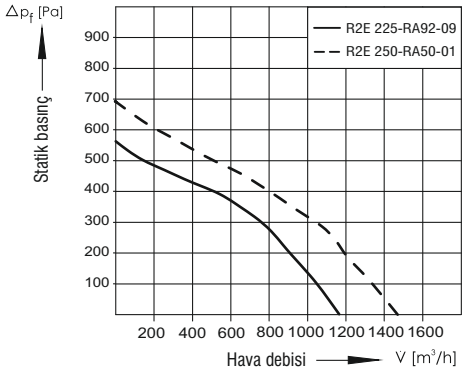
Δpf [Pa]
Statik basınç
R2E 225-RA92-09
R2E 250-RA50-01
Hava debisi
V̇ [m³/h]

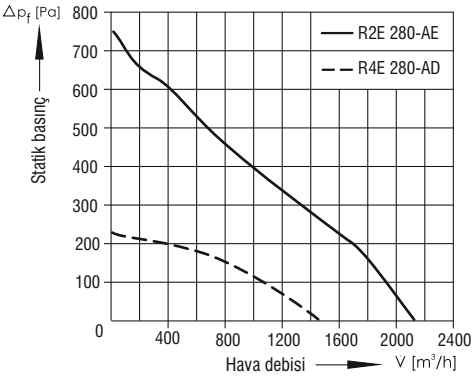
Δpf [Pa]
Statik basınç
R2E 280-AE
R4E 280-AD
Hava debisi
V̇ [m³/h]

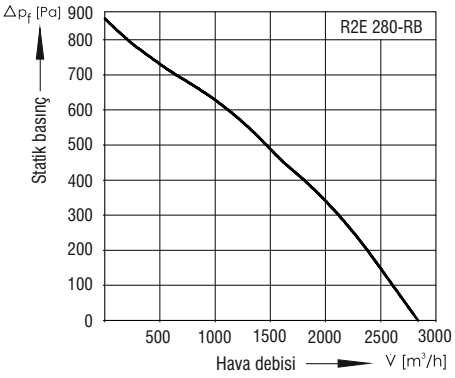
Δpf [Pa]
Statik basınç
R2E 280-RB
Hava debisi
V̇ [m³/h]

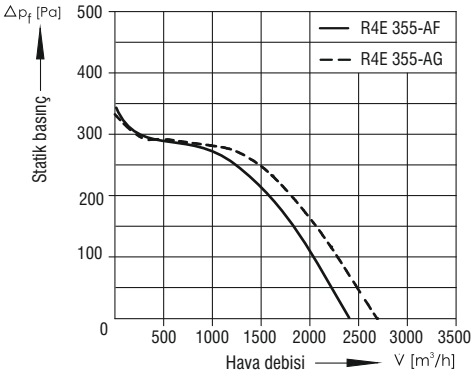
Δpf [Pa]
Statik basınç
R4E 355-AF
R4E 355-AG
Hava debisi
V̇ [m³/h]

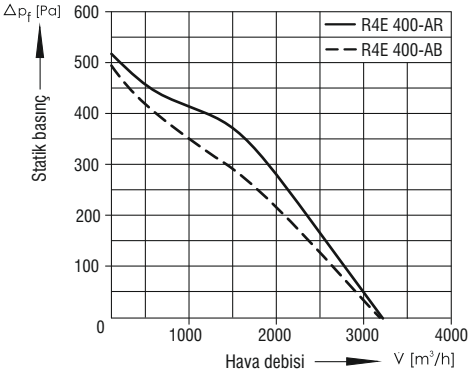
Δpf [Pa]
Statik basınç
R4E 400-AR
R4E 400-AB
Hava debisi
V̇ [m³/h]

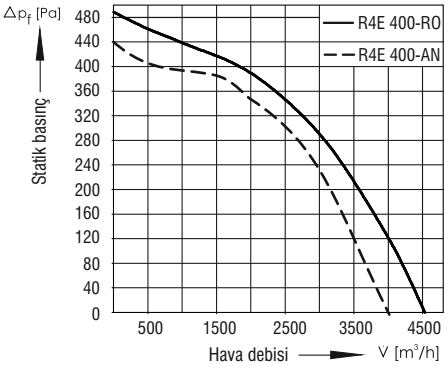
Δpf [Pa]
Statik basınç
R4E 400-RO
R4E 400-AN
Hava debisi
V̇ [m³/h]

ebmpapst GERİYE EĞİK SEYREK KANATLI RADYAL FANLAR

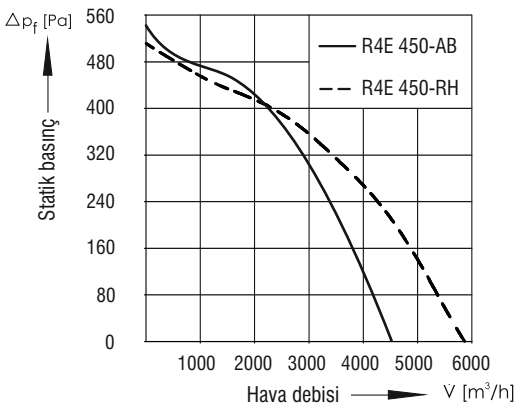

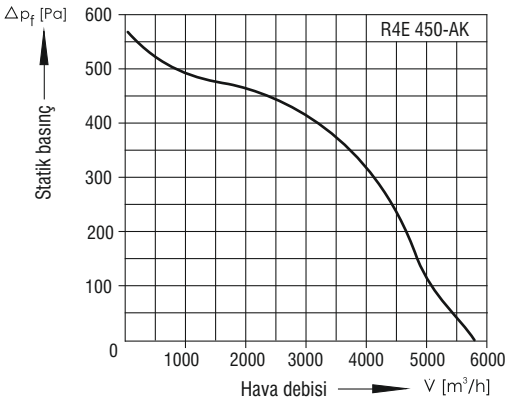

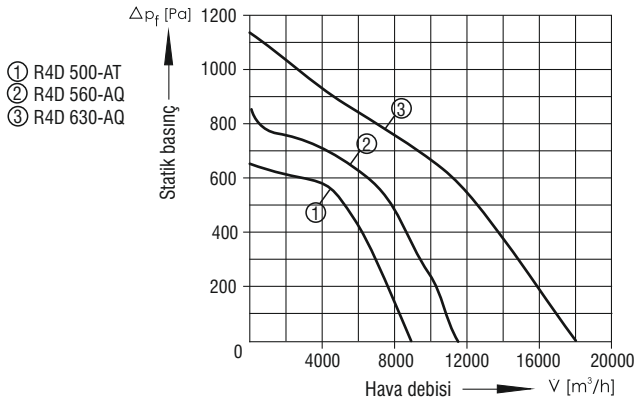

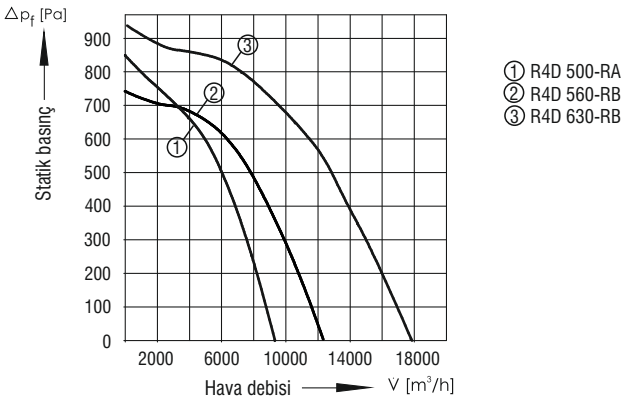

ebmpapst GERİYE EĞİK SEYREK KANATLI RADYAL FANLAR TEKNİK VERİ TABLOSU

Tip	Voltaj V	Frekans Hz	Hava Debisi m³/h	Devir min⁻¹	Giriş Gücü W	Akım A	Kapasitör µF / VDB	Gürültü Seviyesi LwA / dBA	Sıcaklık °C	Ağırlık Kg
R2E 133-BH66-05	230	50	290	2800	24	0,11	1,0 / 400	56	-25..+45	0,7
R2E 175-AR70-05	230	50	465	2600	38	0,17	1,5 / 400	63	-25..+60	0,9
R2E 190-RA26-05	230	50	540	2480	48	0,22	1,5 / 400	66	-25..+65	1,2
R2E 220-RB06-01	230	50	945	2600	90	0,40	2,5 / 400	70	-25..+60	1,8
R2E 225-RA92-09	230	50	1175	2500	155	0,68	3,5 / 450	73	-25..+65	2,3
R2E 250-RA50-01	230	50	1470	2650	165	0,73	5,0 / 400	75	-25..+70	2,9
R2E 280-AE52-05	230	50	2110	2700	225	1,00	7,0 / 400	83	-25..+40	3,5
R2E 280 RB01-01	230	50	2835	2300	515	2,25	12,0 / 400	---	-25..+40	4,6
R4E 280-AD08-05	230	50	1425	1420	78	0,35	2,5 / 450	69	-25..+40	3,18
R4E 355-AF05-05	230	50	2365	1410	170	0,78	6,0 / 400	73	-25..+40	4,4
R4E 355-AG01-05	230	50	2745	1400	215	1,00	7,0 / 400	75	-25..+30	5,3
R4E 400-AB23-05	230	50	3160	1240	292	1,20	8,0 / 400	68	-25..+45	5,1
R4E 400-AR05-06	230	50	3100	1355	375	1,75	8,0 / 400	65	-40..+60	7,1
R4E 400-AN09-06	230	50	4120	1370	480	2,40	10,0 / 400	72	-40..+60	8,5
R4E 400-RO09-01	230	50	4530	1340	470	2,05	9,0 / 400	69	-40..+60	8,5
R4E 450-AB09-06	230	50	4450	1290	640	3,10	10,0 / 400	68	-40..+50	9,5
R4E 450-AK01-01	230	50	5900	1250	680	3,00	14,0 / 400	69	-40..+70	12,5
R4E 450-RH01-01	230	50	5860	1260	690	3,10	14,0 / 450	69	-40..+55	12,0
R4D 500-AT03-01	3~ 230 / 400	50	8300	1375	1430	5,20 / 3,00	---	77	-40..+85	22,2
R4D 500-RA03-01	3~ 230 / 400	50	9510	1370	1520	5,04 / 2,91	---	73	-40..+60	22,3
R4D 560-AQ03-01	3~ 230 / 400	50	11700	1365	2380	8,65 / 5,00	---	81	-40..+60	27,0
R4D 560-RB03-01	3~ 230 / 400	50	12140	1390	1950	6,90 / 3,98	---	78	-40..+60	25,5
R4D 630-AQ03-01	3~ 230 / 400	50	18040	1300	4250	13,10 / 7,55	---	82	-40..+60	29,0
R4D 630-RB15-01	3~ 230 / 400	50	17790	1345	3570	11,50 / 6,63	---	81	-40..+40	28,7

* Pratik olarak; ses basıncı (LpA) seviyesine, ses gücü (LwA) değerini 7 eksilterek ulaşılabilir.