Soğutmada büyük beden modası

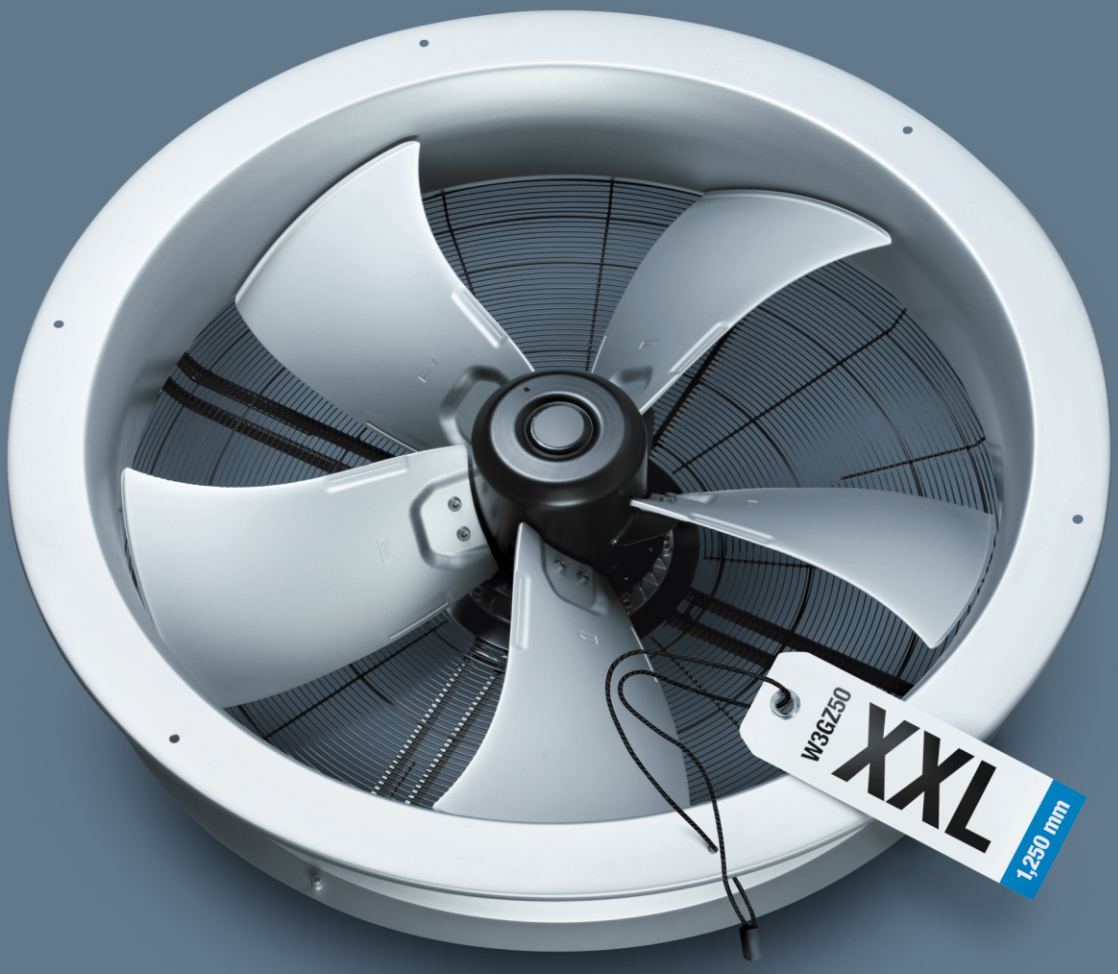

Yüksek kapasiteli soğutma yükleri, yüksek verimli ve daha gelişmiş teknolojili fanlar gerektirir, örneğin 1250 mm çapa sahip performansı da çapı ile orantılı W3GZ50 aksiyel fanımız gibi. GreenTech EC teknolojisinin verimliliği, son derece düşük ses seviyesi, basit kontrol arayüzü ve olağanüstü kullanım ömrü sayesinde " XXL" fanımız diğer alternatiflerin çok ötesindedir. Üstün motor teknolojisi ve ileri aerodinamik dizaynı bir araya getiren ebmpapst, ihtiyaçlarınızı size tek bir üründe sunmaktadır. Sizin yapmanız gereken ise ürünü kutusundan çıkarıp, çalıştırmak ve arkanıza yaslanıp keyfini çıkartmaktır.
www.ebmpapst.com

GREEN TECH by ebmpapst

akantel

10007 Sk. No.6 A.O.S.B. Çiğli - İZMİR
Tel.: 0232 328 20 90 (Pbx) Fax : 0232 328 02 70 e-posta : akantel@akantel.com.tr / satis@akantel.com.tr

Partner of ebmpapst

ErP2015 EXCEEDS THE NORM

EC axial fans

Ø 1250

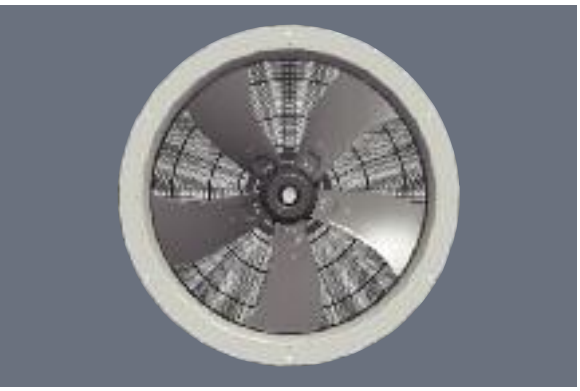

- **Material:** Guard grille: Steel, phosphated and coated in black plastic
  Wall ring: Sheet steel, pre-galvanised and coated in black plastic
  Blades: Die-cast aluminium
  Rotor: Coated in black
  Electronics enclosure: Die-cast aluminium, coated in black
- **Number of blades:** 5
- **Direction of rotation:** clockwise, seen on rotor
- **Type of protection:** IP 54
- **Insulation class:** "F"
- **Mounting position:** Shaft horizontal or rotor on bottom; rotor on top on request
- **Condensate discharges:** Rotor-side
- **Mode of operation:** Continuous operation (S1)
- **Bearings:** Maintenance-free ball bearings

Nominal data

Type	Motor	Blade angle	Curve	Nominal voltage range	Frequency	Speed/rpm(1)	Max. input power(1)	Max. current draw(1)	Max. operative range	Perm. amb. temp.	Mass without attachments	Technical features and electr. connections
				VAC	Hz	rpm	kW	A	Pa	°C	kg	
W3GZ50	M3G 200-LA	0°	A	3~ 380-480	50/60	645	4,10	6,70	180	-25..+60	134,2	p. 5 / L5)
W3GZ50	M3G 200-QA	0°	B	3~ 380-480	50/60	690	4,70	7,70	195	-25..+60	144,7	p. 5 / L5)

subject to alterations

(1) Nominal data in operating point with maximum load and 400 VAC

Curves

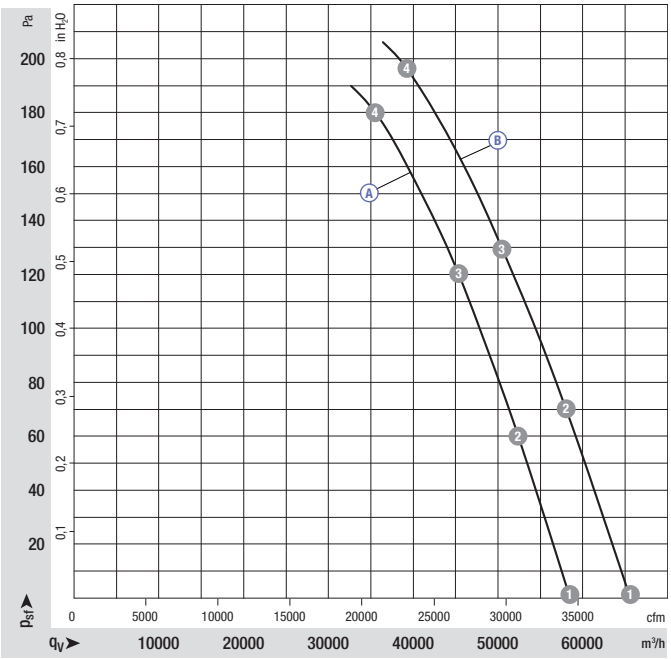

Air performance measured as per: ISO 5801, Installation category A, in ebm-papst full nozzle and without protection against accidental contact

Suction-side noise levels: Lw_A as per ISO 13347, Lp_A measured at 1 m distance to fan axis

The acoustic values given are only valid under the measurment conditions listed and may vary depending on the installation situation.

With any deviation to the standard setup, the specific values have to be checked and reviewed once installed or fitted!

		n [rpm]	P_1 [kW]	I [A]	Lw_A [dB(A)]
A	1	645	2,69	4,64	79
A	2	645	3,16	5,32	78
A	3	645	3,59	5,97	79
A	4	645	4,10	6,70	83
B	1	720	3,57	5,93	82
B	2	715	4,04	6,67	81
B	3	705	4,28	7,03	81
B	4	690	4,70	7,70	84

ebmpapst

- **Technical features:** See electrical connections
- **EMC:** Interference emission acc. to EN 61000-6-3 (household environment)
  Interference immunity acc. to EN 61000-6-2 (industrial environment)
- **Leakage current:** < 3,5 mA
- **Terminal box:** Electrical connection via terminal strip
- **Protection class:** I
- **Product conforming to standards:** CE, EN 61800-5-1
- **Approvals:** UL, CSA

Direction of air flow

‹ "V"

	With full round nozzle
"V"	W3G Z50-FB02 -01
"V"	W3G Z50-FC04 -01

EC axial fans

Ø 1250 with motor M3G200, drawings for direction of air flow "V"

with full round nozzle	Type	Mass [kg]
	W3G Z50-FB02 -01	134,2
	W3G Z50-FC04 -01	144,7

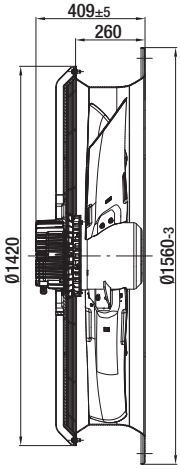

‹ "V"

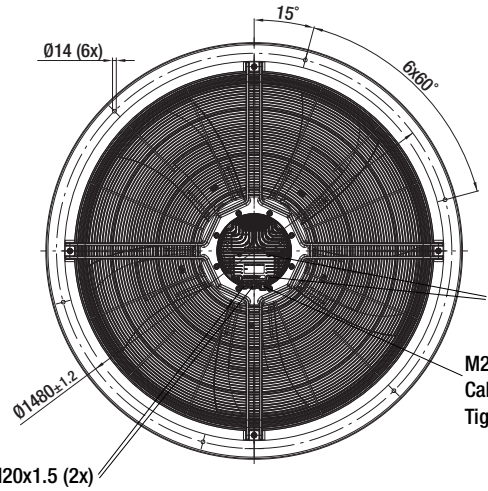

Tightening torque: 3,5 Nm ± 0,5 Nm

M25x1.5 (1x)
Cable diameter: min. 9 mm, max. 16 mm
Tightening torque: 6,0 Nm ± 0,9 Nm

M20x1.5 (2x)
Cable diameter: min. 4 mm, max. 10 mm
Tightening torque: 4,0 Nm ± 0,6 Nm

ebmpapst

Electrical connections EC

L5)

Technical features:

- PFC (passive)
- Integrated PID controller
- Control input 0-10 VDC or 4-20 mA
- Input for sensor 0-10 V or 4-20 mA
- Slave output 0-10 V max. 5 mA
- Output 20 VDC (±25 % / -10 %) max. 50 mA
- Output 10 VDC (+3 %) max. 10 mA
- RS485 MODBUS
- Motor current limitation, alarm relay
- Line undervoltage / phase failure detection
- Electronics / motor overtemperature protection
- Locked-rotor protection, soft start
- Digital inputs for day/night switch, enabling, cooling / heating

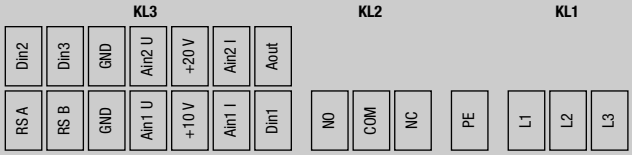

Connector	Connection	Assignment / function
KL1	L3	Mains; L3
	L2	Mains; L2
	L1	Mains; L1
PE	PE	Protective earth
KL2	NC	Alarm relay, break for failure
	COM	Alarm relay, COMMON (2A, 250 VAC, AC1)
	NO	Alarm relay, make for failure

Connector	Connection	Assignment / function
KL3	Din1	Digital input 1 (enabling / disabling of electronics),,
		Enabling: Pin open or applied voltage 5...50 VDC
		Disabling: Bridge to GND or applied voltage < 1 VDC
	Ain1 I	Analogue set value input, 4-20 mA (impedance 100 Ω),
		only to be used as alternative to terminal Ain1 U
	+10 V	Supply for external potentiometer,
		10 VDC (±3 %) max. 10 mA
	Ain1U	Analogue set value input, 0-10 V (impedance 100 kΩ),
		only to be used as alternative to terminal Ain1 I
	GND	GND
	RSB	RS485 interface for MODBUS RTU; RS B
	RSA	RS485 interface for MODBUS RTU; RS A
	Aout	Analogue output 0-10 V max. 5 mA, reading of current
		motor speed / current motor control factor
	Ain2 I	Analog. actual value input, 4-20mA (impedance 100Ω),
		only to be used as alternative to terminal Ain2 U
	+20 V	Supply for external sensor,
		20 VDC (+25 % / -10%) max. 50 mA
	Ain2 U	Analog. actual value input, 0-10 V (impedance 100 kΩ),
		only to be used as alternative to terminal Ain2 I
	GND	GND
	Din3	Digital input 3 (switch Normal / Inverse),
		The preset effective direction of the integrated
		controller can be selected via BUS or via digital input
		Normal/Inverse.
		Normal: Pin open or applied voltage 5...50 VDC
		Inverse: Bridge to GND or applied voltage < 1 VDC
	Din2	Digital input 2 (switch Day / Night),
		The preset set of parameters can be selected via BUS
		or via digital input Day/Night.
		Day: Pin open or applied voltage 5...50 VDC
		Night: Bridge to GND or applied voltage < 1 VDC