The ECI motor family

The ECI motor – dynamics, performance and high flexibility

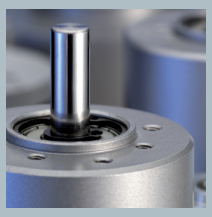

Technical information

Are you looking for high dynamic properties, high torque and full power on demand? The electronically commutated inner rotor motors of the ECI series are the professional drive solution when short cycle times, fast motion-sequences and long lifetime are required.

With the electronic commutation of the ECI motors, the maximum values for life expectancy are made possible. Based on this the ECI motors can be used in many various applications as maintenance-free drive components throughout the entire life span of the device or machine. Depending on the motor type and size the commutation electronics to operate these motors is available either as integrated or external version.

High power density has been achieved by using highly efficient neodymium magnetic materials. This enables the ECI motors to deliver a high output power from a comparably small motor volume for a vast variety of applications and assembly situations. For most of the motors in this series the magnets are designed as bar magnets that are embedded into the slots of a stacked rotor lamination core. Being permanently embedded, these magnets are not only efficient to manufacture in automated production, but they can also be used up to high motor speeds without the need for any additional safety measures.

The mechanically closed design of these inner rotor motors enables the motors to reach a protection class of IP 40 already in the standard motor version. Higher protection classes are available on request depending on the exact motor type. In addition the design of the motor flanges with various diameters of bore holes on different reference circle diameters offers extremely flexible mounting possibilities for the integration of the motors into many various applications. Furthermore, several types of the ECI motors can be equipped with low-noise planetary gears in various ratios in order to adapt speed and torque in a best possible way to the individual requirements of your application.

In brief and straight to the point

- 3-phase, electronically commutated internal rotor with neodymium magnet
- Power range from 30 to 270 watts, high power density and wide overload margin
- Long service life and silent running
- Rotor position detection via 3 Hall-sensors
- Several motor types also available with planetary gears
- Optoelectronic encoder for some motor types available on request
- Spring applied brake for some motor types available on request
- Customer-specific winding layouts
- Winding insulation as per Insulation Class E
- Protection class as per EN 60 034-5: IP 40, higher if required


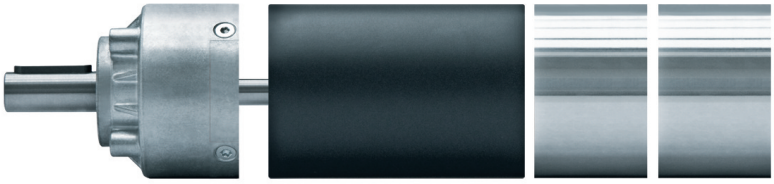


The ECI motor series consists of 4 sizes, with diameters from 35 to 63 mm, and some are available in several lengths. In addition to the DRIVECONTROL series operating electronics included, a variety of gearboxes are also available. Other accessory components, which are available on request, can be used to expand the application possibilities to a vast array of drive tasks.

ECI 63 Modular System - from the module to the smart module:

At the heart of this series is newly developed multi-pole internal rotor motors that have been optimised by means of elaborate FEM calculations for ideal distribution of the magnetic flow density in the motor.
This effort yields remarkable results: Nominal torque up to nearly 900 mNm and thus up to 400 W output power and a motor efficiency of up to 90 % for size 63 mean an enormous increase in performance compared to the predecessor motors.

The combination of the auxiliary modules can be selected as desired according to the modular principle, but follows a clear structure. The motor is always the first module in the drive housing. Depending on the requirement, it is followed by a high-torque permanent magnet brake and high-resolution encoders in various designs. The "rear panel" of all of the functional modules that can be integrated is the motor control element with integrated electronics, including the corresponding interfaces. All modules are assembled using a systematic interface design. The result is a drive with type of protection IP 54 from a single cast.

External expansions are no problem.
However, even with the installation of the integrated modules, the limit of expansion options is not yet reached. As an alternative to the integrated modules or in addition to them, you can install additional modules with a shaft in open design that is lead through the B side or rear of the drive. Here, additional brakes with powerful spring force mechanics and encoders in various designs are available.

Electronics that are modular and scalable.
The complete modularity of the ECI module includes the drive electronics. This reduces the range of motor variants needed to a minimum and enables each configuration to be equipped with different performance classes or different range of function for its drive task. This range extends from a simple module with rotor position encoder and external commutation (K1) to the high-end design (K5), which includes features such as a CANopen interface with multiple program modules to DSP 402 (or IEC 61800-7-201). An implementation and programming tool and an interpreter enable you to create user-specific sequence programs that carry out the functions of a small PLC.

Performance advantages at a glance:
- Reduced design and maintenance effort for versatility in forming variants
- Full compatibility of all modules
- Very high power density with dramatically increased torque
- IP 54 possible as standard for every configuration
- CANopen interface in size K5

ECI motors

The following diagram illustrates the sequence of the Hall signals and the corresponding drive sequence with the relevant colours and / or pin assignment that apply to customer-developed products and / or to purchased electronics. It also illustrates the phase position of these signals to the induced motor voltage.

Commutation sequences

Commutation sequence

Chronological signal sequence of integrated Hall sensors (= RLG) at the corresponding connections.

Switching sequences of the power output stage

Required relationship between the signal change from RLG and the relevant change for the switching status of the power transistors in relation to the phase lead to the motor.

Induced voltages

Idealised illustration of the sequence of the induced voltages between the relevant connections.

Total of induced voltages

Supply voltage for

Hall IC

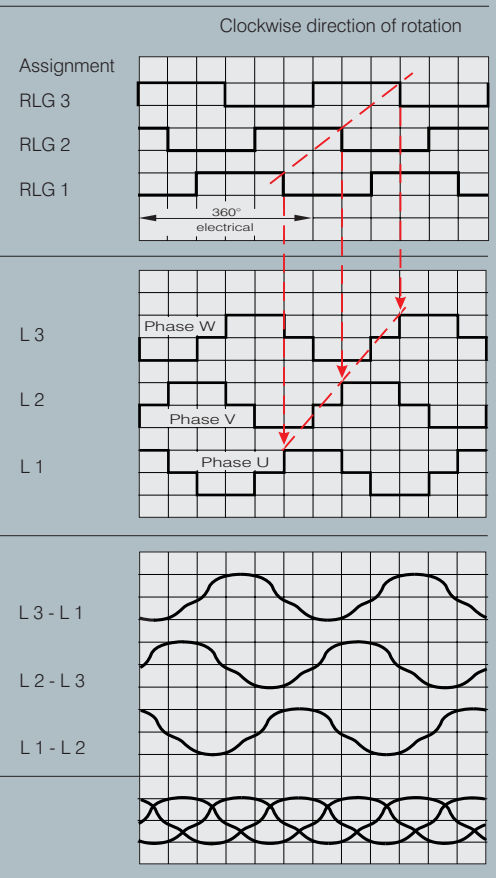

ECI
Position
grey
white
green
yellow
violet
brown
yellow-brown
violet-yellow
brown-violet
red
black

Sensor plug ECI 24.XX / 63.XX

Type: Molex
No.: 39-01-2085

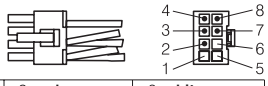

1: —	2: **red**	3: **white**
4: **green**	5: —	6: —
7: **black**	8: **grey**	

Power plug ECI 24.XX / 63.XX

Type: Molex
No.: 19-09-1036

1: **yellow**	2: **violet**	3: **brown**

Hall IC

Specification data available on request.

ebmpapst

ECI motor

ECI 30.20

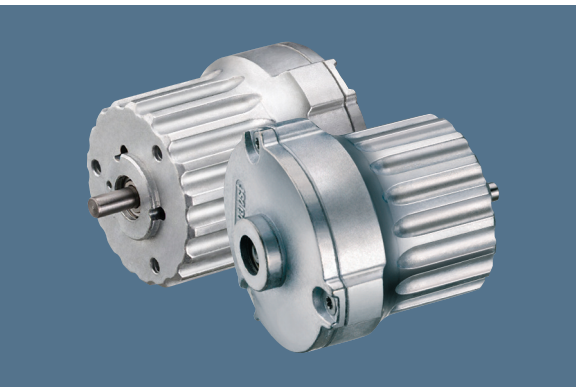

- Very dynamic 3-phase, 6-pulse internal rotor motor.
- EC technology with slotless stator design.
- Extremely silent running, no cogging torque.
- Very suitable for high speed applications due to minimized iron losses.
- Dynamically balanced rotor with 4-pole neodymium magnet.
- Detection of rotor position via 3 Hall sensors.
  Option: motor without sensors for sensorless operation.
- Precision ball bearings for long service life and silent running.
- Motor supply and control via external operating electronics.

Nominal data

Type		ECI 30.20 B01
Nominal voltage (U_{BN})	V DC	24
Nominal speed (n_N)	rpm	30 000
Nominal torque (M_N)	mNm	10
Nominal current (I_{BN})	A	1,9
Nominal output power (P_N)	W	32
Speed at no-load operation (n_L)	rpm	43 000
No-load current (I_{BL})	A	0,20
Continuous stall torque (M_{BN0})	mNm	---
Permissible eff. continuous stall current, motor lead (I_{n0eff})	A	---
Permissible continuous stall power (P_{Bn0})	W	---
Short-term permiss. peak torque (M_{max})	mNm	45
Permiss. peak current, motor lead (I_{max})	A	8
Induced voltage (U_{imax})	V/1000 rpm	0,62
Terminal resistance (R_v)	Ω	1,9
Terminal inductance (L_v)	mH	0,26
Rotor moment of inertia (J_R)	kgm^2x10^{-6}	1,5
Thermal resistance (R_{th})	K/W	---
Protection class		IP 20
Ambient temperature range (T_U)	°C	0 to +40
Motor mass (m)	kg	0,21
Order No.		932 3020 001

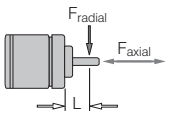

F_{axial} 6 N
F_{radial} 1 N L_1 10 mm

Permissible shaft load at nominal speed and life expectancy L_{10} at 20 000 h (at T_U max. 40°C).

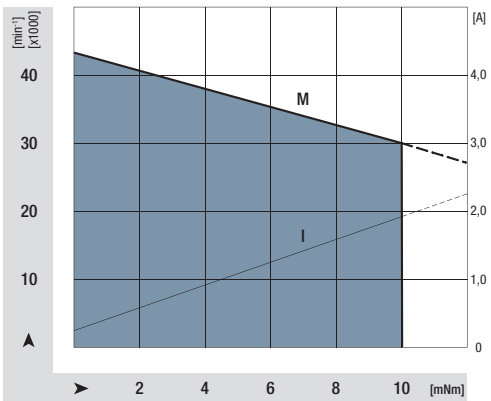

Operating electronics:
DRIVECONTROL VT-A in a version without speed control can be used for tests (adapter cable necessary).

Blind holes for self threading screws according to DIN 7500. Screw in depth 5,3 mm max.

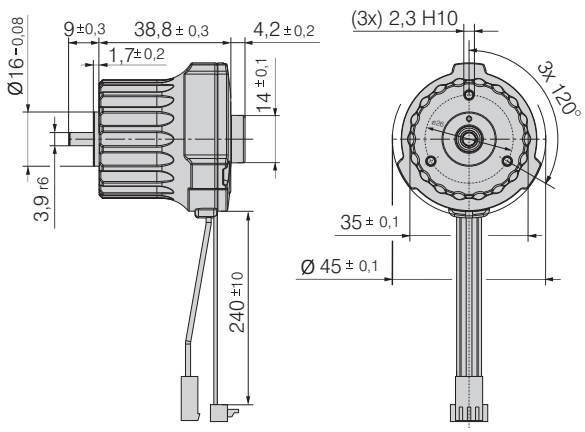

ECI motor

ECI-C-42.40

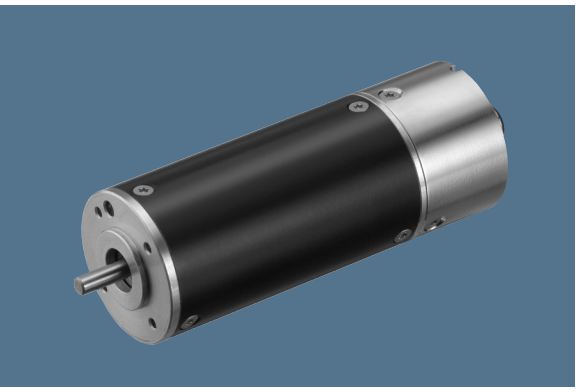

- Dynamic 3-phase internal rotor motor in EC technology with increased starting torque.
- Integrated operating electronics with powerful microcontroller.
- Excellent controllability due to digital 4-Q PI controller.
- High efficiency due to FET power output stage.
- Analog set value.
- Protection against overload due to integrated, speed-dependent current limiting.
- Customised versions possible by software and hardware adaption (e.g. fixed speed, direction of rotation).

Nominal data

Type		ECI-C-42.40 B01	ECI-C-42.40 B00
Nominal voltage (U_{BN})	V DC	24	24
Permissible supply voltage range (U_B)	V DC	18 to 28	18 to 28
Nominal speed (n_N)	rpm	6 000	5 000
Nominal torque (M_N)	mNm	80	100
Nominal current (I_{BN})	A	3,0	3,0
Nominal output power (P_N)	W	50	52
Speed at no-load operation (n_L)	rpm	9 300	6 300
No-load current (I_{BL})	A	0,30	0,25
Max. reverse voltage	V DC	30	30
Set value input	V	0to10	0to10
Set speed	rpm	0 to 10 000	0 to 10 000
Recommended speed control range	rpm	300 to 6 000	300 to 5 000
Locked-rotor protection		thermal	thermal
Locked-rotor protection		no	no
Overload protection		yes	yes
Starting torque	mNm	140	140
Rotor moment of inertia (J_R)	kgm^2x10^{-6}	3,2	3,2
Thermal resistance (R_{th})	K/W	3,3	3,3
Protection class		IP 40	IP 40
Ambient temperature range (T_U)	°C	0 to +40	0 to +40
Motor mass (m)	kg	0,7	0,7
Order No.		932 4240 600	932 4240 610

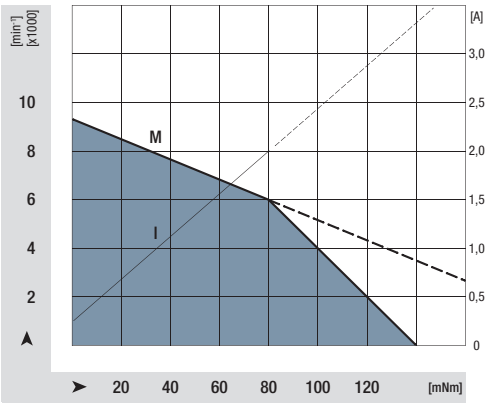

F_{axial} 30 N
F_{radial} 15 N L_1 10 mm

Permissible shaft load at nominal speed and life expectancy L_{10} at 20 000 h (at T_U max. 40°C).

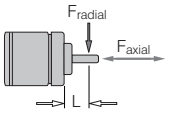

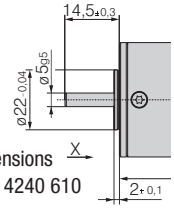

Shaft dimensions
Motor 932 4240 610

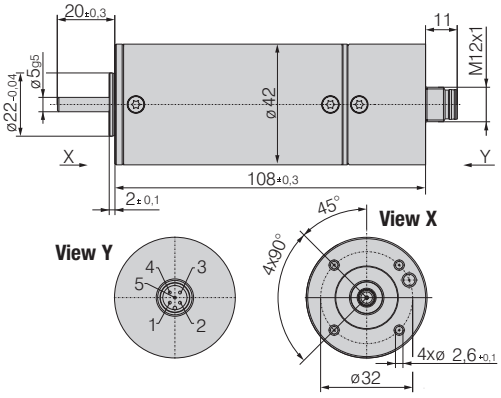

ebmpapst

Pin configuration for ECI-C-42.40

Pin connection

Pin 1	U_B
Pin 2	Direction of rotation
Pin 3	GND
Pin 4	ACTUAL speed value
Pin 5	Set value

Pin configuration

Plug Type: Company Lumberg:

Lumberg Type RKT 5-228/...m (direct coupling)

RKT 5-228/2m
ebm-papst Order No. 992 0160 001

Type RKWT 5-228/...m (angle coupling)

Type FST 5-FKT 5-293/...m (Fixcon plug / coupling)

1. Control input rotation (Pin 2)

Pin 2	
1	Counter-clockwise rotation
0	Clockwise rotation

low (0)	0 to 0.8 V
high (1)	2.4 to 28 V

Direction of rotation viewed on shaft

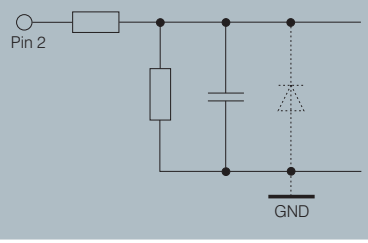

2. Actual speed value output (Pin 4)

Version:

Open Collector

$U_{ext.\ max}$ = 30 V

U_{CESAT} = 0.5 V

I_{CMAX} = 5mA

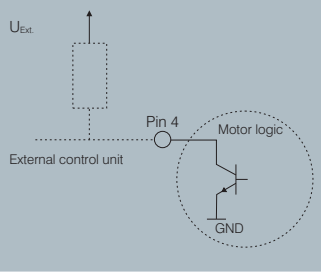

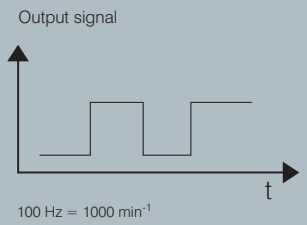

3. Set value input (Pin 5)

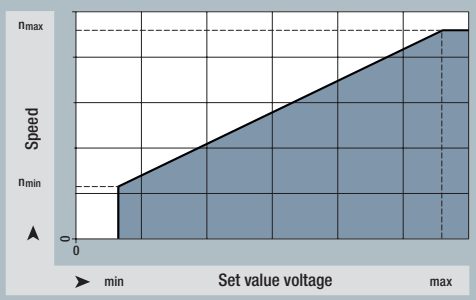

Speed setting for speed control via set value voltage interface 0 to 10 V DC. (1 V = 1 000 U/min)

By set value voltage <0.2 V the brake function will be activated. The braking function serves to slow down the motor only. It has no holding brake function for static duty.

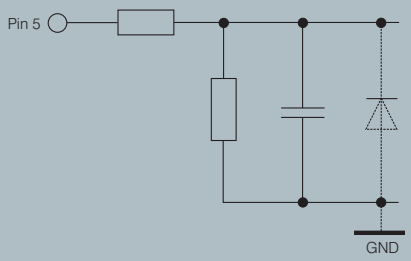

For detailed information, please refer to the corresponding specification data sheets.
The instructions and safety notes in the operating manual must be observed at all times.

ECI gearmotor

ECI-C-42.40-PX

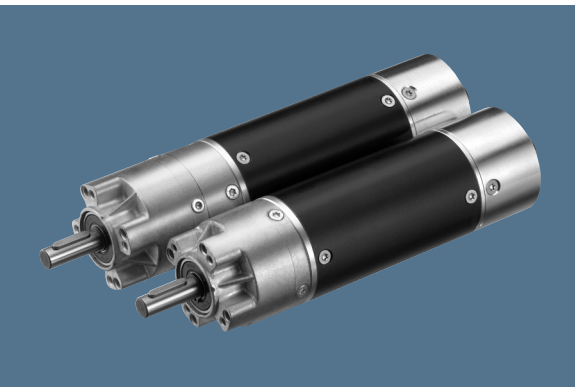

- Dynamic 3-phase internal rotor motor in EC technology with increased starting torque.
- Integrated operating electronics with powerful microcontroller.
- Excellent controllability due to digital 4-Q PI controller.
- High efficiency due to FET power output stage.
- Analog set value.
- Protection against overload due to integrated, speed-dependent current limiting.
- Customised versions possible by software and hardware adaption (e.g. fixed speed, direction of rotation).

Nominal data	Gear ratio	Gear stages	Nominal torque	Speed range	Length L1	Length L2	Mass	Order No. 942 4240 . . .
Type	**i**		**Nm**	**rpm**	**mm**	**mm**	**kg**	
ECI-C-42.40 B00-PX42/3	3,2 : 1	1	0,3	100 to 1 572	143,3	35,3	0,9	...603
ECI-C-42.40 B00-PX42/5	5,0 : 1	1	0,5	60 to 1 000	143,3	35,3	0,9	...600
ECI-C-42.40 B00-PX42/21	21,3 : 1	2	1,7	14 to 235	158,8	50,8	1,0	...601
ECI-C-42.40 B00-PX42/30	30,0 : 1	2	2,4	10 to 167	158,8	50,8	1,0	...602
ECI-C-42.40 B00-PX42/150	150,0 : 1	3	10,3*	2 to 33	174,3	66,3	1,0	...604

* Limiting of max. output torque to 10.3 Nm required.

Gearmotor PX

One stage and multi-stage planetary gearbox with zinc die-cast housing.
Grease lubrication for maintenance-free continuous operation.
Output shaft with combined sleeve- / ball bearings.
Optimized helical gearing for long service life and quiet running in the first stage.

Gear-Output shaft load

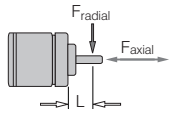

F_{axial} 150 N
F_{radial} 250 N L_1 12,5 mm

Permissible shaft load at nominal speed and life expectancy L_{10} at 5 000 h (at T_U max. 40°C).

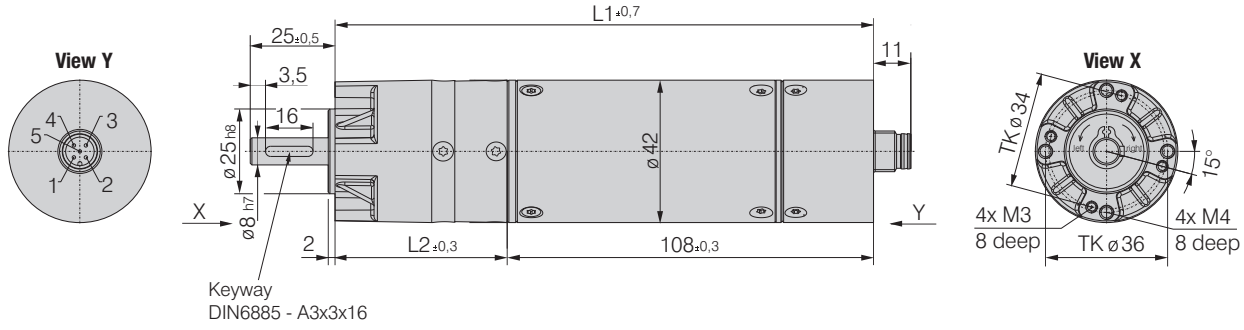

ebmpapst

ECI motor

ECI 63.20

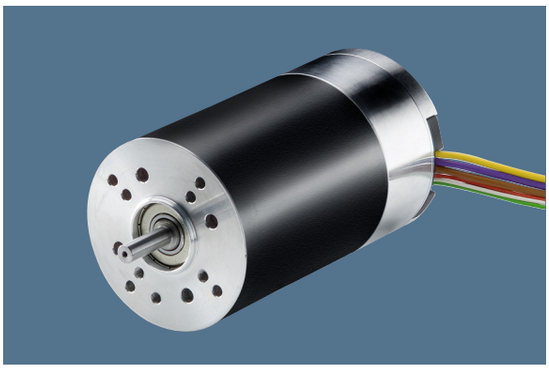

- Highly dynamic 3-phase internal rotor motor in EC technology
- Multi-pole motor design for optimum power density
- Aluminium housing
- Robust ball bearing system for long service life
- Mechanical design and interfaces designed for modular flexibility
- Basic motor with electronics module K1 for operation with external drive electronics
- Protection class IP 54 included in basic concept

Nominal data

Type		ECI 63.20 B00	ECI 63.20 D00
Nominal voltage (U_{BN})	V DC	24	48
Nominal speed (n_N)	rpm	4 000	4 000
Nominal torque (M_N)	mNm	360	360
Nominal current (I_{BN})	A	8,5	4,5
Nominal output power (P_N)	W	150	150
Speed at no-load operation (n_L)	rpm	5 800	6 800
No-load current (I_{BL})	A	0,5	0,3
Continuous stall torque (M_{BN0})	mNm	430	430
Permissible eff. continuous stall current, motor lead (I_{n0eff})	A	10,5	6,0
Permissible continuous stall power (P_{BN0})	W	22,5	21,0
Short-term permiss. peak torque (M_{max})	mNm	1 800	1 800
Permiss. peak current, motor lead (I_{max})	A	55	30
Induced voltage (U_{imax})	V/1000 rpm	4,34	7,55
Terminal resistance (R_V)	Ω	0,14	0,42
Terminal inductance (L_V)	mH	0,265	0,88
Rotor moment of inertia (J_R)	kgm^2x10^{-6}	19	19
Thermal resistance (R_{th})	K/W	3,6	3,6
Protection class		IP 40 / IP 54	IP 40 / IP 54
Ambient temperature range (T_U)	°C	0 to +40	0 to +40
Motor mass (m)	kg	0,9	0,9
Order No.	Cable design	932 6320 100	932 6320 102
Order No.	Strand design	932 6320 103	932 6320 105

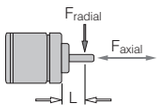

F_{axial} 150 N
F_{radial} 150 N L_1 20 mm

Permissible shaft load at nominal speed and life expectancy L_{10} at 20 000 h (at T_U max. 40°C).

Signal line

Colour	Function
green	Hall A
white	Hall B
grey	Hall C
red	U_B Hall, 12 V DC
black	Gnd

Winding input lead

No.	Colour	Function
1	yellow	W
2	violet	V
3	brown	U

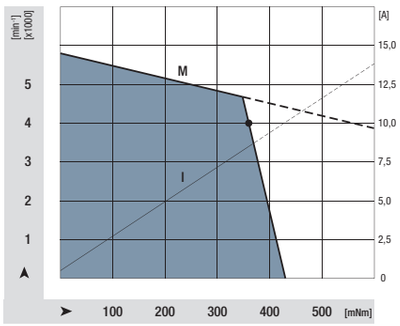

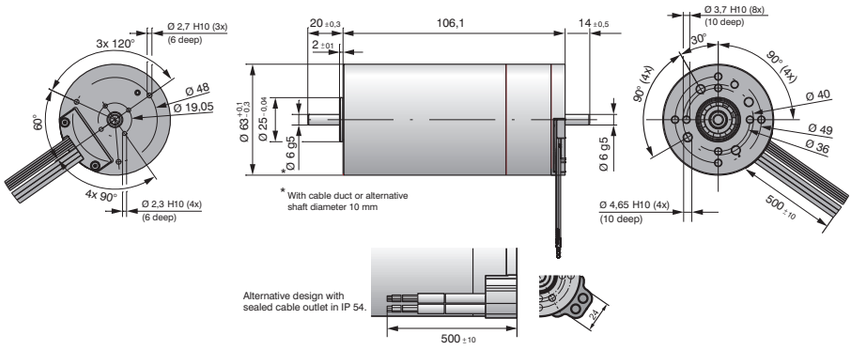

ECI motor

ECI 63.40

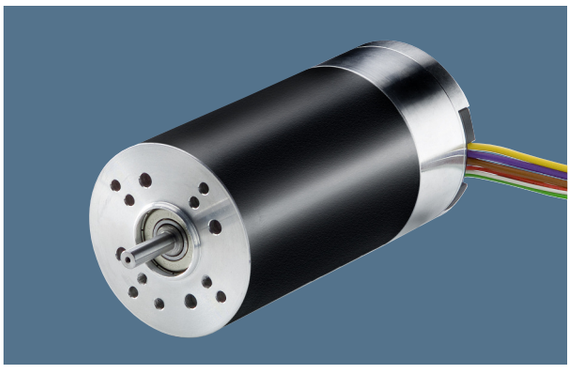

- Highly dynamic 3-phase internal rotor motor in EC technology
- Multi-pole motor design for optimum power density
- Aluminium housing
- Robust ball bearing system for long service life
- Mechanical design and interfaces designed for modular flexibility
- Basic motor with electronics module K1 for operation with external drive electronics
- Protection class IP 54 included in basic concept

Nominal data

Type		ECI 63.40 B00	ECI 63.40 D00
Nominal voltage (U_{BN})	V DC	24	48
Nominal speed (n_N)	rpm	4 000	4 000
Nominal torque (M_N)	mNm	670	670
Nominal current (I_{BN})	A	14,0	6,5
Nominal output power (P_N)	W	280	280
Speed at no-load operation (n_L)	rpm	5 900	5 900
No-load current (I_{BL})	A	0,70	0,32
Continuous stall torque (M_{BN0})	mNm	820	820
Permissible eff. continuous stall current, motor lead (I_{n0eff})	A	16,5	9,0
Permissible continuous stall power (P_{BN0})	W	29	29
Short-term permiss. peak torque (M_{max})	mNm	3 300	3 300
Permiss. peak current, motor lead (I_{max})	A	95	45
Induced voltage (U_{imax})	V/1000 rpm	4,39	8,73
Terminal resistance (R_V)	Ω	0,075	0,24
Terminal inductance (L_V)	mH	0,14	0,565
Rotor moment of inertia (J_R)	kgm^2x10^{-6}	38	38
Thermal resistance (R_{th})	K/W	2,9	2,9
Protection class		IP 40 / IP 54	IP 40 / IP 54
Ambient temperature range (T_U)	°C	0 to +40	0 to +40
Motor mass (m)	kg	1,2	1,2
Order No.	Cable design	932 6340 100*	932 6340 102
Order No.	Strand design	932 6340 103	932 6340 105

* only with limited continuous current (13A) applicable

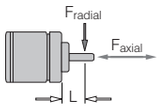

F_{axial} 150 N
F_{radial} 150 N L_1 20 mm

Permissible shaft load at nominal speed and life expectancy L_{10} at 20 000 h (at T_U max. 40°C).

Signal line

Colour	Function
green	Hall A
white	Hall B
grey	Hall C
red	U_B Hall, 12 V DC
black	Gnd

Winding input lead

No.	Colour	Function
1	yellow	W
2	violet	V
3	brown	U

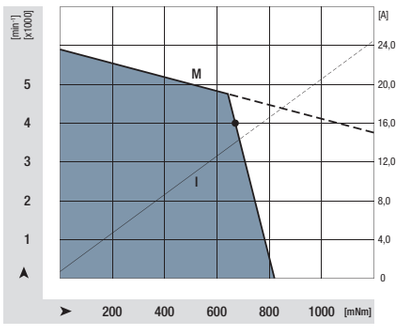

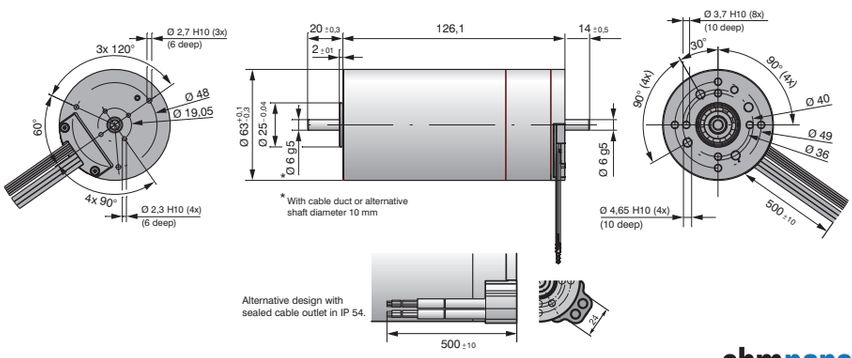

ebmpapst

ECI motor

ECI 63.60

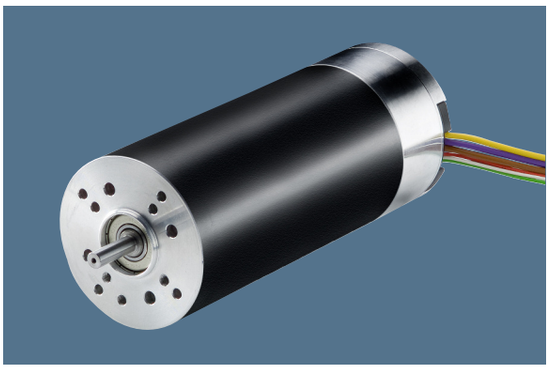

- Highly dynamic 3-phase internal rotor motor in EC technology
- Multi-pole motor design for optimum power density
- Aluminium housing
- Robust ball bearing system for long service life
- Mechanical design and interfaces designed for modular flexibility
- Basic motor with electronics module K1 for operation with external drive electronics
- Protection class IP 54 included in basic concept

Nominal data

Type		ECI 63.60 B00	ECI 63.60 D00
Nominal voltage (U_{BN})	V DC	24	48
Nominal speed (n_N)	rpm	4 000	4 000
Nominal torque (M_N)	mNm	880	880
Nominal current (I_{BN})	A	17,6	8,5
Nominal output power (P_N)	W	370	370
Speed at no-load operation (n_L)	rpm	6 000	6 000
No-load current (I_{BL})	A	0,9	0,45
Continuous stall torque (M_{BN0})	mNm	900	900
Permissible eff. continuous stall current, motor lead (I_{n0eff})	A	24,0	12,0
Permissible continuous stall power (P_{BN0})	W	35	30
Short-term permiss. peak torque (M_{max})	mNm	4 400	4 400
Permiss. peak current, motor lead (I_{max})	A	115	57,5
Induced voltage (U_{imax})	V/1000 rpm	4,26	8,58
Terminal resistance (R_V)	Ω	0,045	0,15
Terminal inductance (L_V)	mH	0,0765	0,325
Rotor moment of inertia (J_R)	kgm^2x10^{-6}	57	57
Thermal resistance (R_{th})	K/W	2,5	2,5
Protection class		IP 40	IP 40 / IP 54
Ambient temperature range (T_U)	°C	0 to +40	0 to +40
Motor mass (m)	kg	1,5	1,5
Order No.	Cable design	-	932 6360 102
Order No.	Strand design	932 6360 106	932 6360 108

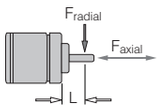

F_{axial} 150 N
F_{radial} 150 N L_1 20 mm

Permissible shaft load at nominal speed and life expectancy L_{10} at 20 000 h (at T_U max. 40°C).

Signal line

Colour	Function
green	Hall A
white	Hall B
grey	Hall C
red	U_B Hall, 12 V DC
black	Gnd

Winding input lead

No.	Colour	Function
1	yellow	W
2	violet	V
3	brown	U

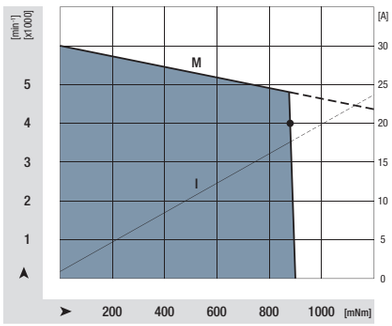

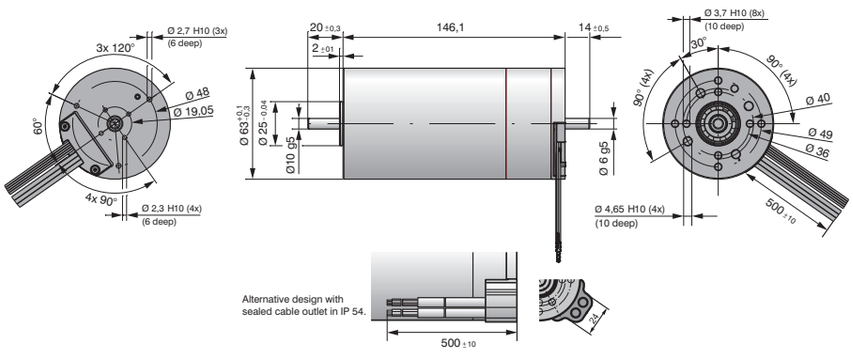

ECI 63.20

with electronics module K5

- Completely integrated electronic operation and control unit “K5” with CANopen communication interface
- Sinus commutation of the drives with field-oriented control
- Speed control range down to n = 0 rpm with holding torque
- Different operating modes according to DSP 402 (speed, positioning, homing, torque) possible via software
- Electronics in safely sealed housing
- Connectors M16 and M12 in sealed industry standard
- Extensive interface with many inputs and outputs

Nominal data

Type		ECI-C5-63.20 B00	ECI-C5-63.20 D00
Nominal voltage (U_N)	V DC	24	48
Permissible supply voltage range (U_{ZK})	V DC	20 to 28	40 to 53
Nominal speed (n_N)	rpm	4 000	4 000
Nominal torque (M_N)	mNm	425*	450*
Nominal current (I_N)	A	8,5*	5,4*
Nominal output power (P_N)	W	178*	188*
Speed at no-load operation (n_L)	rpm	5 600*	6 000
No-load current (I_L)	A	0,76*	0,6*
Max. reverse voltage	V DC	35	58
Set value input		Can Open	Can Open
Set speed	rpm	-	-
Recommended speed control range	rpm	0 … 5 000	0 to 5 000
Locked-rotor protection		thermal	thermal
with locked-rotor protection clock		no	no
Overload protection		yes	yes
Starting torque	mNm	1,5x M_N*	2x M_N*
Rotor moment of inertia (J_R)	kgm^2x10^{-6}	19	19
Thermal resistance (R_{th})	K/W	3,6	3,6
Protection class		IP 54**	IP 54**
Ambient temperature range (T_U)	°C	0 … +40	0 … +40
Motor mass (m)	kg	0,9	0,9
Order No.		932 6320 500	932 6320 502

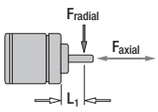

F_{axial} 150 N
F_{radial} 150 N L_1 20 mm

Permissible shaft load at nominal speed and life expectancy L_{10} at 20 000 h (at T_U max. 40°C).

* Preliminary data
** Classification of protection class refers to installed state with sealing on the flange side.

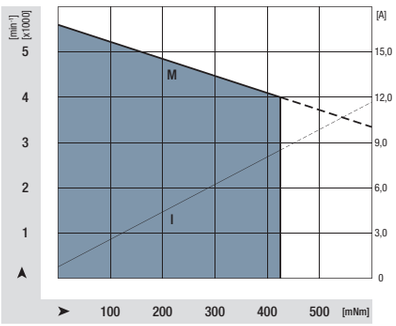

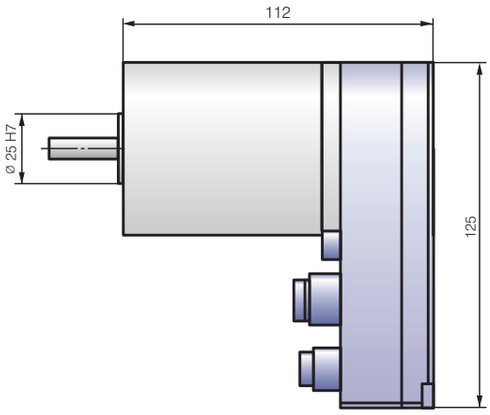

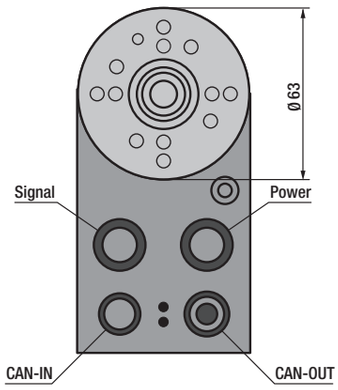

ebmpapst

ECI 63.40

with electronics module K5

- Completely integrated electronic operation and control unit “K5” with CANopen communication interface
- Sinus commutation of the drives with field-oriented control
- Speed control range down to n = 0 rpm with holding torque
- Different operating modes according to DSP 402 (speed, positioning, homing, torque) possible via software
- Electronics in safely sealed housing
- Connectors M16 and M12 in sealed industry standard
- Extensive interface with many inputs and outputs

Nominal data

Type		ECI-C5-63.40 B00	ECI-C5-63.40 D00
Nominal voltage (U_N)	V DC	24	48
Permissible supply voltage range (U_{ZK})	V DC	20 to 28	40 to 53
Nominal speed (n_N)	rpm	4 000	4 000
Nominal torque (M_N)	mNm	600*	750*
Nominal current (I_N)	A	12,3*	7,2*
Nominal output power (P_N)	W	251*	314*
Speed at no-load operation (n_L)	rpm	5 600*	5 400*
No-load current (I_L)	A	1,4*	0,5*
Max. reverse voltage	V DC	35	58
Set value input		Can Open	Can Open
Set speed	rpm	-	-
Recommended speed control range	rpm	0 … 5 000	0 to 5 000
Locked-rotor protection		thermal	thermal
with locked-rotor protection clock		no	no
Overload protection		yes	yes
Starting torque	mNm	1,5x M_N*	2x M_N*
Rotor moment of inertia (J_R)	kgm^2x10^{-6}	38	38
Thermal resistance (R_{th})	K/W	2,9	2,9
Protection class		IP 54**	IP 54**
Ambient temperature range (T_U)	°C	0 … +40	0 … +40
Motor mass (m)	kg	1,2	1,2
Order No.		932 6340 500	932 6340 502

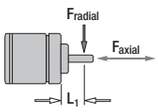

F_{axial} 150 N
F_{radial} 150 N L_1 20 mm

Permissible shaft load at nominal speed and life expectancy L_{10} at 20 000 h (at T_U max. 40°C).

* Preliminary data

** Classification of protection class refers to installed state with sealing on the flange side.

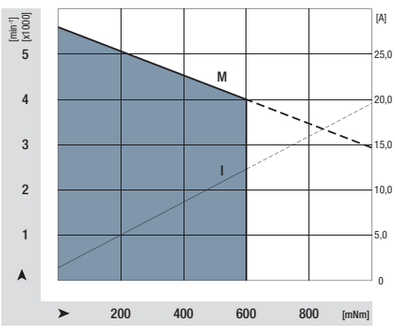

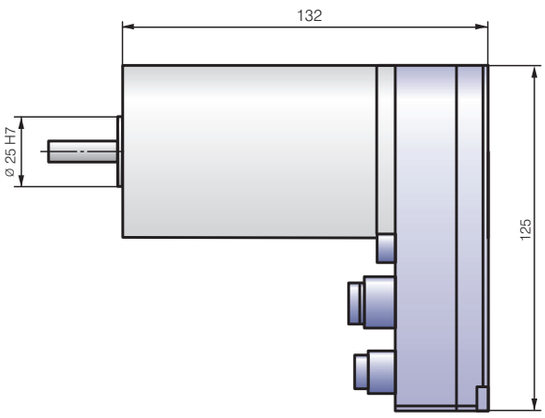

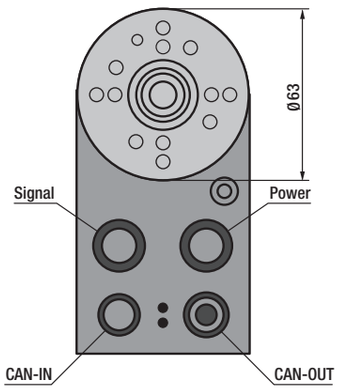

ECI 63.60

with electronics module K5

- Completely integrated electronic operation and control unit “K5” with CANopen communication interface
- Sinus commutation of the drives with field-oriented control
- Speed control range down to n = 0 rpm with holding torque
- Different operating modes according to DSP 402 (speed, positioning, homing, torque) possible via software
- Electronics in safely sealed housing
- Connectors M16 and M12 in sealed industry standard
- Extensive interface with many inputs and outputs

Nominal data

Type		ECI-C5-63.60 D00
Nominal voltage (U_N)	V DC	48
Permissible supply voltage range (U_{ZK})	V DC	40 to 53
Nominal speed (n_N)	rpm	4 000
Nominal torque (M_N)	mNm	850*
Nominal current (I_N)	A	8,6*
Nominal output power (P_N)	W	356*
Speed at no-load operation (n_L)	rpm	5 800*
No-load current (I_L)	A	0,85*
Max. reverse voltage	V DC	58
Set value input		Can Open
Set speed	rpm	-
Recommended speed control range	rpm	0 … 5 000
Locked-rotor protection		thermal
with locked-rotor protection clock		no
Overload protection		yes
Starting torque	mNm	2x M_N*
Rotor moment of inertia (J_R)	kgm^2x10^{-6}	57
Thermal resistance (R_{th})	K/W	2,5
Protection class		IP 54
Ambient temperature range (T_U)	°C	0 … +40
Motor mass (m)	kg	1,6
Order No.		932 6360 502

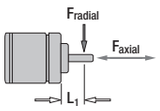

F_{axial} 150 N
F_{radial} 150 N L_1 20 mm

Permissible shaft load at nominal speed and life expectancy L_{10} at 20 000 h (at T_U max. 40°C).

* Preliminary data

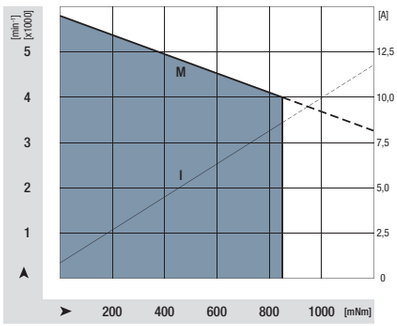

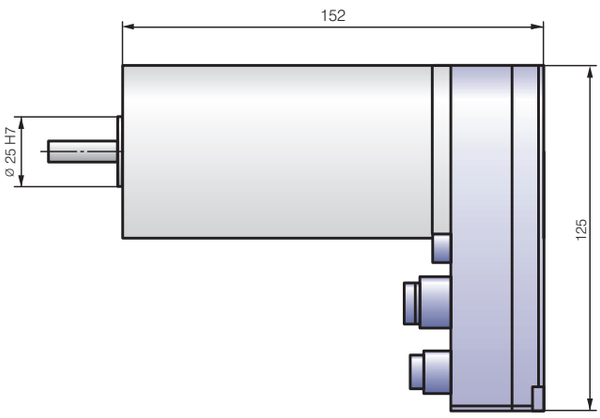

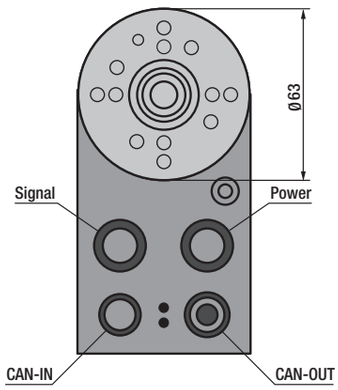

ebmpapst

ECI 63.20 / 63.40 / 63.60

Connection description with electronics module K5

- Connector system in sealed industry standard.
- 2 plugs in M16 for power and logic supply.
- Extensive interface functions due to a large number of analogue and digital I/Os.
- 2 plugs in M12 for separate CAN-IN and CAN-Out configuration (simplified and safe wiring; additional CAN-open T piece for looping through the CAN wires for 1 -plug solutions no longer necessary!).

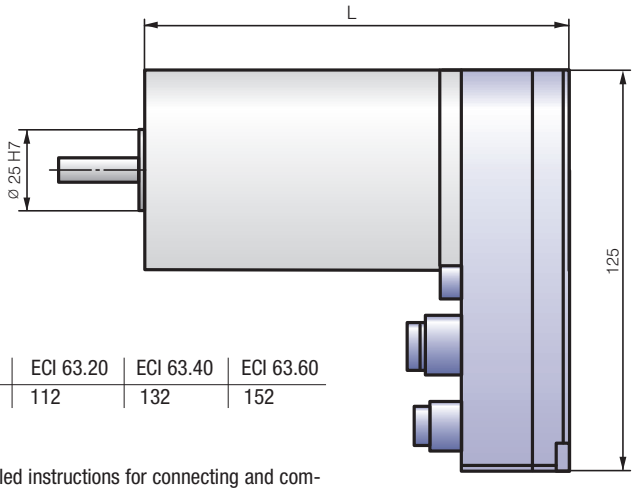

Type	ECI 63.20	ECI 63.40	ECI 63.60
L	112	132	152

Detailed instructions for connecting and commissioning are provided with the specifications.

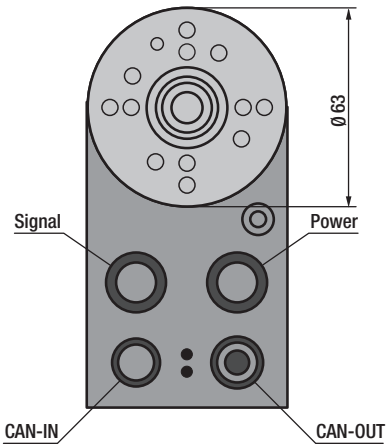

Detail of signal

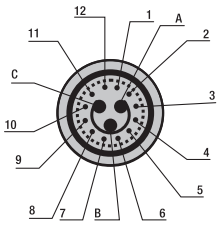

Pin 1	Digital I/O 1	PNP 24 V
Pin 2	Digital I/O 2	PNP 24 V
Pin 3	Digital I/O 3	PNP 24 V
Pin 4	Digital I/O 4	PNP 24 V
Pin 5	Digital I/O 5	PNP 24 V
Pin 6	Digital I/O 6	PNP 24 V
Pin 7	Digital I/O 7	PNP 24 V
Pin 8	Digital I/O 8	PNP 24 V
Pin 9	Digital I/O 9	NPN / PNP 24 V
Pin 10	Enable	24 V
Pin 11	Analog IN 1	0 to 10 V
Pin 12	Analog IN 2	0 to 10 V
Pin A	Analog GND	GND_{Analog}
Pin B	U_C	Logic power supply + (24 V)
Pin C	GND	Logic power supply – (GND)

Detail of power

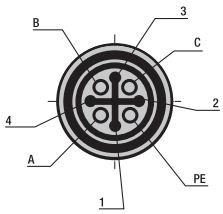

Pin A	U_ZK	Power supply
Pin B	Ballast/Brake	Ballast resistor/brake connection
Pin C	GND power	Power supply
Pin PE	PE	Earthing (on motor housing)
Pin 1	CAN_H	CAN-Bus high signal
Pin 2	CAN_L	CAN-Bus low signal
Pin 3	Enable	24 V
Pin 4	Digital I/0 9	NPN / PNP 24 V

Detail of CAN-IN

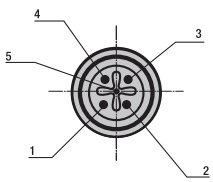

Pin 1	n.c.	
Pin 2	Bridge to pin 2 CAN-OUT	
Pin 3	Bridge to pin 3 CAN-OUT	
Pin 4	CAN_H	CAN-Bus high signal
Pin 5	CAN_L	CAN-Bus low signal

Detail of CAN-OUT

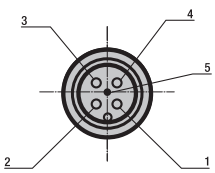

Pin 1	n.c.	
Pin 2	Bridge to pin 2 CAN-IN	
Pin 3	Bridge to pin 3 CAN-IN	
Pin 4	CAN_H	CAN-Bus high signal
Pin 5	CAN_L	CAN-Bus low signal

ECI gearbox versions

ECI with Performax 63

- 3-phase internal rotor motor in EC technology.
- Motor supply and control via external operating electronics.
- Combined with single and multi-stage planetary gearboxes in modular design.
- Gearbox housing made of die-cast zinc.
- First stage with noise optimized helical gears made of low-friction-optimised plastics.
- Second stage with planetary gears made of case-hardened steel for high torques.
- Grease lubrication for maintenance-free continuous operation.
- Available in various reduction ratios.

Gear data	Gear ratio	Gear stages	Nominal torque	Nominal speed	Nominal current	Mass
Type	i		Nm	rpm	A	kg
ECI 63.20 B00-PX63/3	3,2	1	1,0	1258	6,9	1,4
ECI 63.20 B00-PX63/5	5	1	1,6	800	6,9	1,4
ECI 63.20 B00-PX63/21	21,3	2	6,2	188	6,9	1,9
ECI 63.20 B00-PX63/30	30	2	8,7	133	6,9	1,9
ECI 63.40 B00-PX63/3	3,2	1	1,9	1258	15,1	1,7
ECI 63.40 B00-PX63/5	5	1	3,0	800	15,1	1,7
ECI 63.40 B00-PX63/21	21,3	2	11,5	188	15,1	2,2
ECI 63.40 B00-PX63/30	30	2	16,3	133	15,1	2,2
ECI 63.60 B00-PX63/3	3,2	1	2,5	1258	21	2,0
ECI 63.60 B00-PX63/21	21,3	2	15,1	188	21	2,5

Additional designs with alternative gearboxes available on request

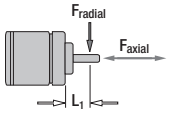

F_{axial} 500 N
F_{radial} 350 N L_1 19 mm

Permissible shaft load at nominal speed and life expectancy L_{10} at 5 000 h (at T_U max. 40°C).

Type	ECI 63.20	ECI 63.40	ECI 63.60
L	112	132	152

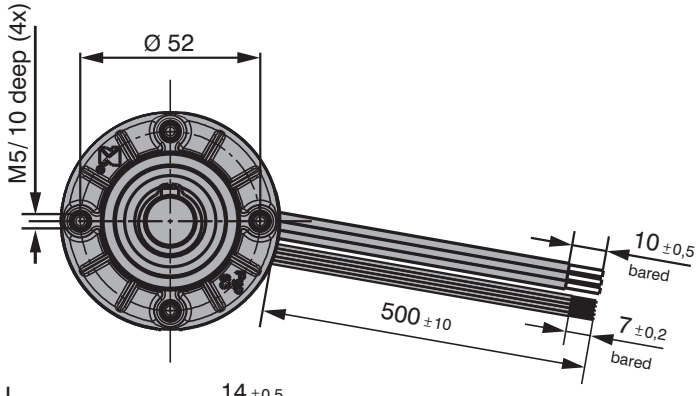

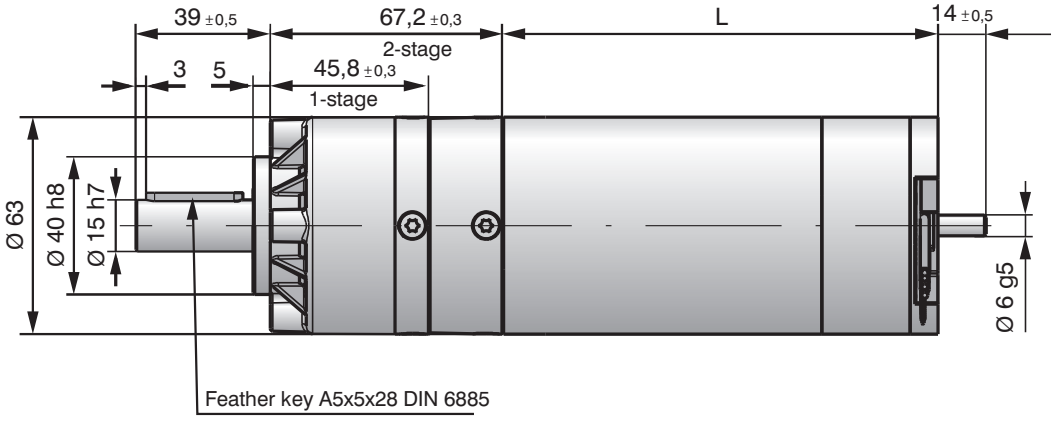

ebmpapst

ECI gearbox versions

ECI with Performax 63 HRL

- 3-phase internal rotor motor in EC technology.
- Motor supply and control via external operating electronics.
- Combined with single and multi-stage planetary gearboxes in modular design.
- Gearbox housing made of die-cast zinc.
- First stage with noise optimized helical gears made of low-friction-optimised plastics.
- Second stage with planetary gears made of case-hardened steel for high torques.
- Grease lubrication for maintenance-free continuous operation.
- Available in various reduction ratios.
- Version HRL 63 with reinforced support of the output stage for increased radial loads.

Gear data	Gear ratio	Gear stages	Nominal torque	Nominal speed	Nominal current	Mass
Type	i		Nm	rpm	A	kg
ECI 63.20 B00-PX63HRL/5	5	1	1,6	800	6,9	1,6
ECI 63.20 B00-PX63HRL/30	30	2	8,7	133	6,9	2,0
ECI 63.40 B00-PX63HRL/5	5	1	3,0	800	15,1	1,9
ECI 63.40 B00-PX63HRL/30	30	2	16,3	133	15,1	2,3
ECI 63.60 B00-PX63HRL/5	5	1	4,0	800	21	2,2
ECI 63.60 B00-PX63HRL/30	30	2	21,4	133	21	2,6

Additional designs with alternative gearboxes available on request

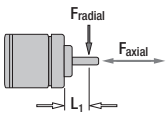

F_{axial} 500 N
F_{radial} 500 N L_1 19 mm

Permissible shaft load at nominal speed and life expectancy L_{10} at 5 000 h (at T_U max. 40°C).

Type	ECI 63.20	ECI 63.40	ECI 63.60
L	112	132	152

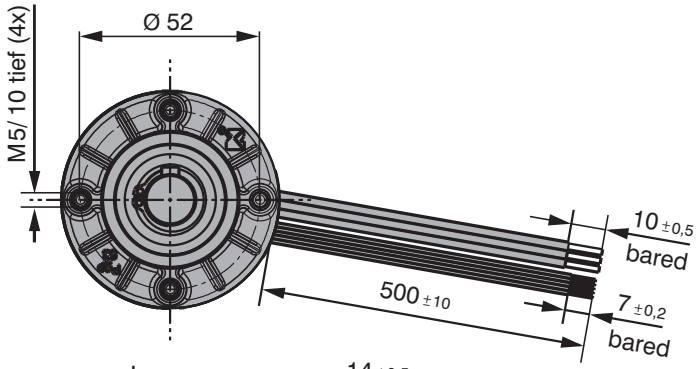

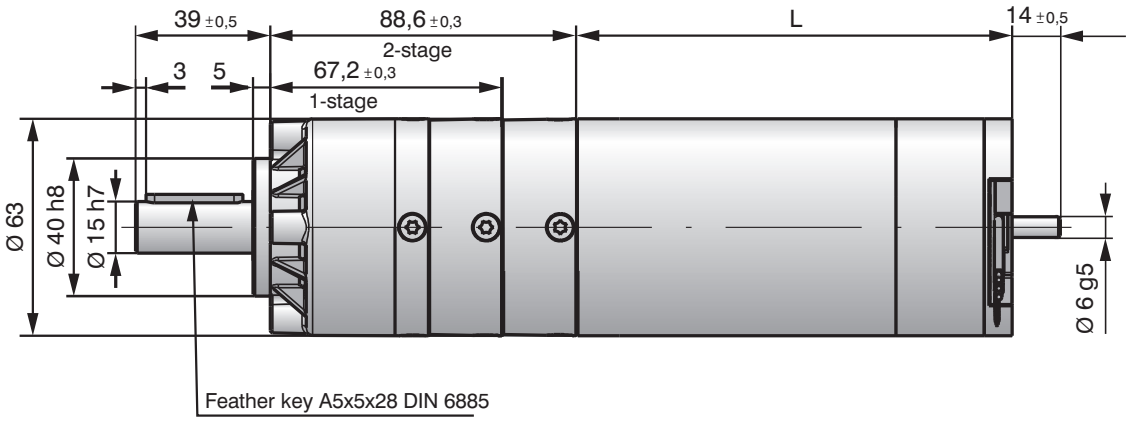

ECI gearbox versions

ECI with NoiselessPlus 63

- 3-phase internal rotor motor in EC technology.
- Motor supply and control via external operating electronics.
- Combined with single and multi-stage planetary gearboxes in modular design.
- Gearbox housing made of machined aluminium.
- Precision machined gears in the aluminium hollow wheel.
- Noise-optimised helical gears in all stages.
- Grease lubrication for maintenance-free continuous operation.
- Available in various reduction ratios.

Gear data	Gear ratio	Gear stages	Nominal torque	Nominal speed	Nominal current	Mass
Type	i		Nm	rpm	A	kg
ECI 63.20 B00-PN63/4	4,3	1	1,4	930	6,9	1,5
ECI 63.20 B00-PN63/6	6	1	1,9	667	6,9	1,5
ECI 63.20 B00-PN63/26	26	2	7,6	667	6,9	1,7
ECI 63.40 B00-PN63/4	4,3	1	2,6	930	15,1	1,8
ECI 63.40 B00-PN63/6	6	1	3,6	667	15,1	1,8
ECI 63.40 B00-PN63/26	26	2	14,1	667	15,1	2,0
ECI 63.60 B00-PN63/4	4,3	1	3,4	930	21	2,1
ECI 63.60 B00-PN63/6	6	1	4,8	667	21	2,1
ECI 63.60 B00-PN63/26	26	2	18,5	667	21	2,3

Additional designs with alternative gearboxes available on request

F_{axial} 1000 N
F_{radial} 500 N L_1 19 mm

Permissible shaft load at nominal speed and life expectancy L_{10} at 5 000 h (at T_U max. 40°C).

Type	ECI 63.20	ECI 63.40	ECI 63.60
L	112	132	152

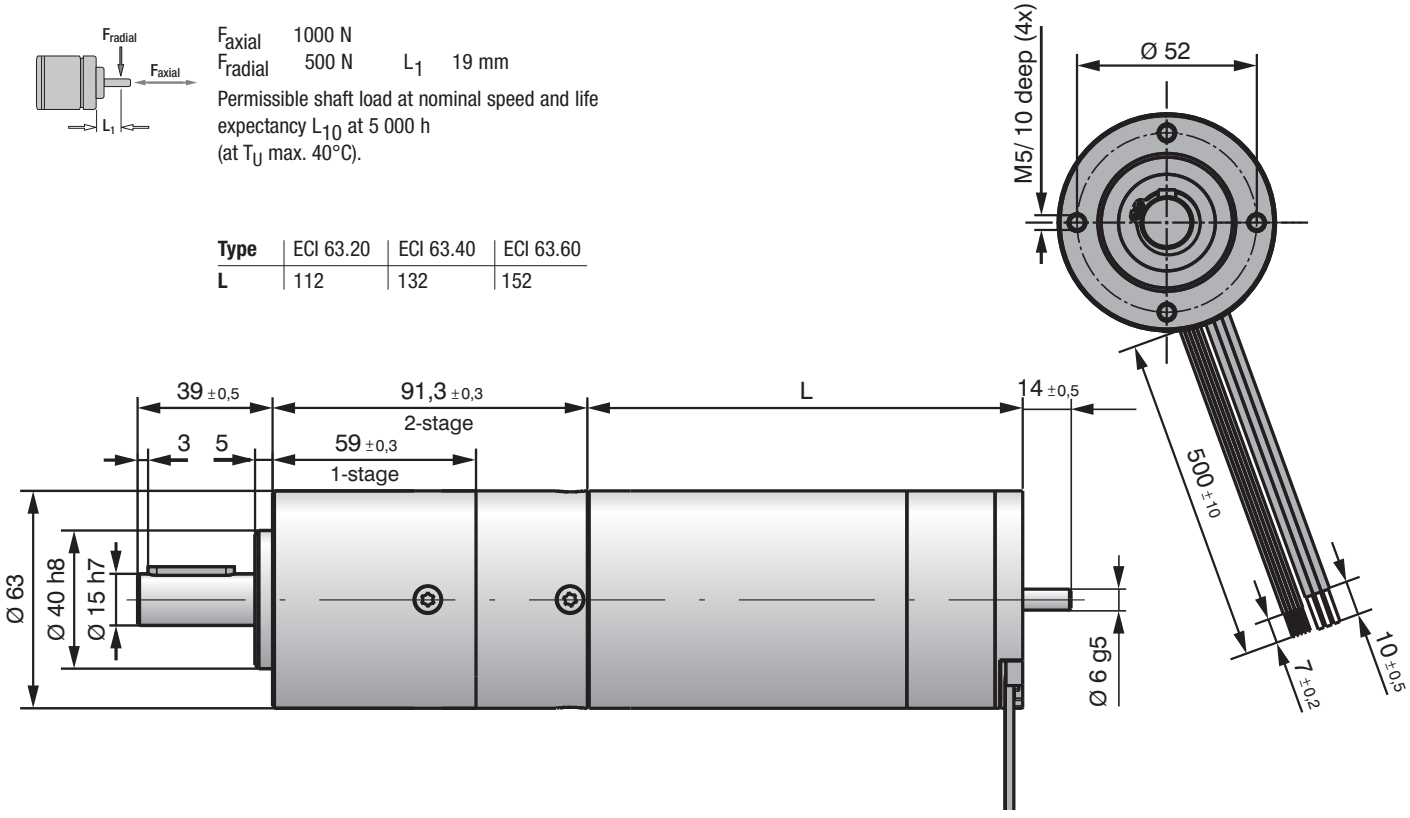

ebmpapst

ECI gearbox versions

ECI with EtaCrown 75

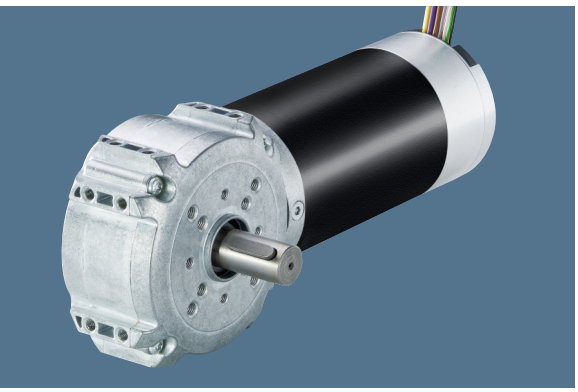

- 3-phase internal rotor motor in EC technology.
- Motor supply and control via external operating electronics.
- Combined with single and multi-stage bevel gearboxes.
- High efficiency through innovative crown gear technology.
- Gearbox housing made of die-cast zinc.
- Smooth-running and robust due to optimized gear design.
- Grease lubrication for maintenance-free continuous operation.
- Available in various reduction ratios.

Gear data	Gear ratio	Gear stages	Nominal torque	Nominal speed	Nominal current	Mass
Type	i		Nm	rpm	A	kg
ECI 63.20 B00-EC75/4	4,1	1	1,3	976	6,9	1,8
ECI 63.20 B00-EC75/7	6,7	1	2,2	597	6,9	1,8
ECI 63.20 B00-EC75/20	20,3	2	5,9	197	6,9	2,2
ECI 63.20 B00-EC75/33	33,3	2	9,7	120	6,9	2,2

Additional designs with alternative gearboxes available on request

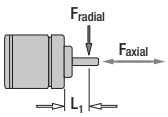

F_{axial} 500 N
F_{radial} 400 N L_1 15 mm

Permissible shaft load at nominal speed and life expectancy L_{10} at 5 000 h (at T_U max. 40°C).

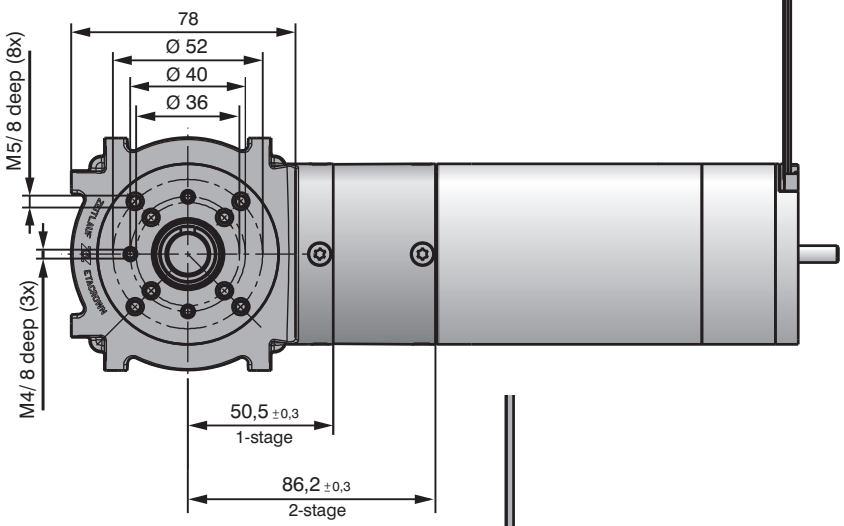

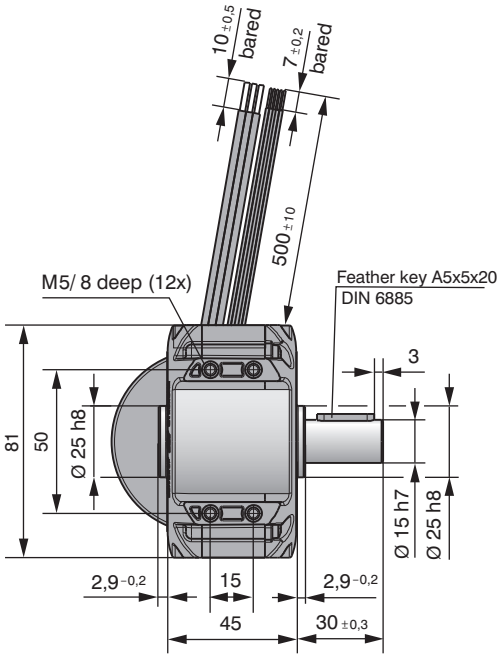

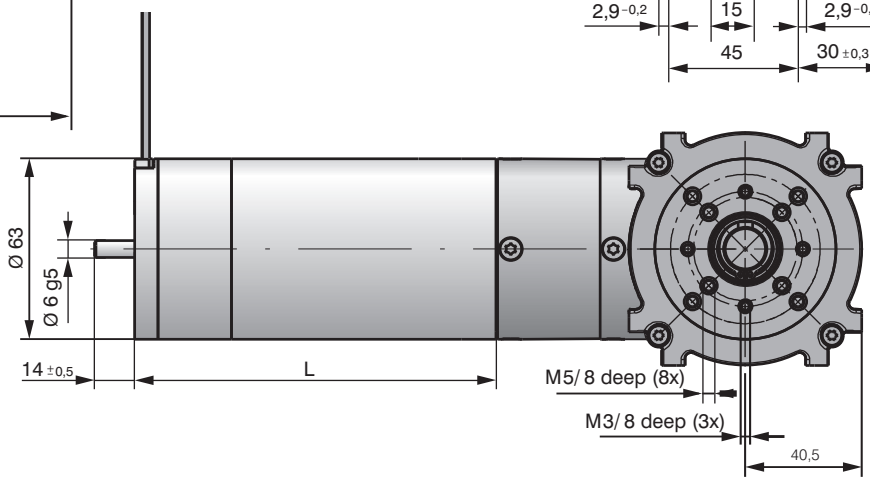

Type	ECI 63.20	ECI 63.40	ECI 63.60
L	112	132	152

ECI sensor module external

Encoder HEDS 5500

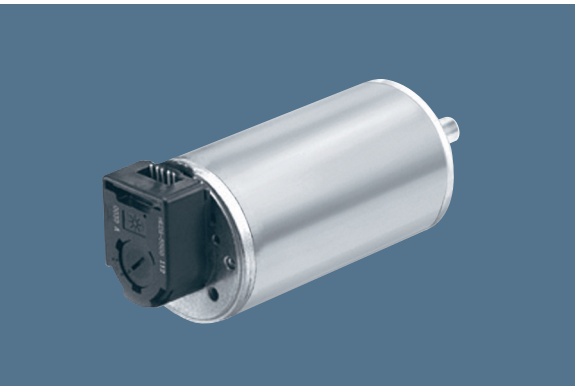

- Optoelectronic 2-channel incremental encoder
- The encoder features non-contact, wear-free operation
- 2 rectangular signals with 90° phase shift, TTL compatible
- Variants with other encoder resolutions on request

Type		HEDS 5500
Number of pulses		512 pulses per revolution (channel A and B), other encoder resolutions on request!
Cut-off frequency	kHz	100
Supply voltage	V DC	5 +/– 10 %
Current draw	mA	typ. 17 (max. 40)
Protection class		IP 00
Pin assignment		1=Gnd I 2=free I 3=A I 4=UB I 5=B
Plug type		e. g. AMP 103686-4 or 600442-5

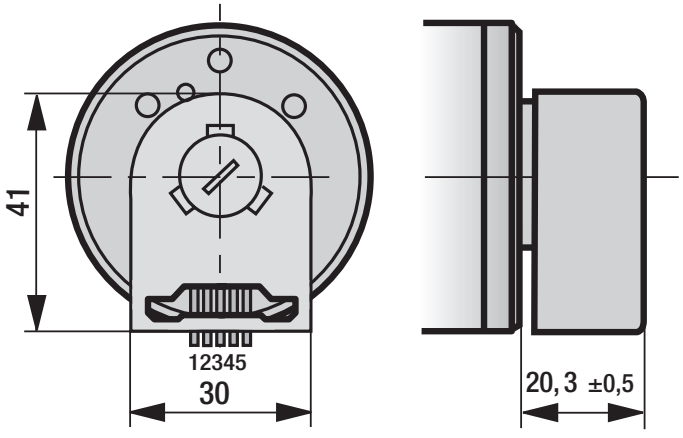

ebmpapst

ECI sensor module integrated

Multiturn absolute encoder FMG-Kit

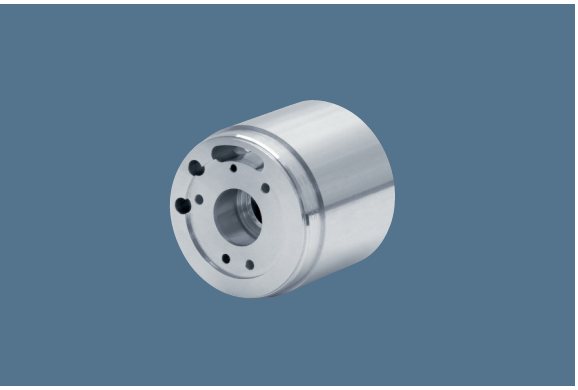

- Module integrated between basic motor and electronics module
- Multiturn absolute encoder
- System with magnetic scanning and reduction gear
- Positioning capability with absolute value measurement
- The current position value is available immediately after switching on
- Available in conjunction with electronics modules of class K5 only

Type	FMG-Kit
Multiturn resolution	12 Bit
Measuring range	0 … 4 096 revolutions
Direction of rotation	cw / ccw
Protection class	IP 54 (for built-in module)

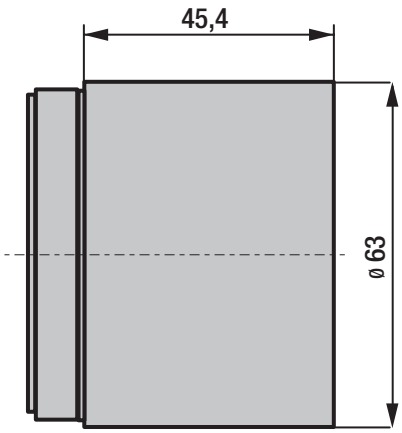

ECI brake module external

Spring applied brake BFK

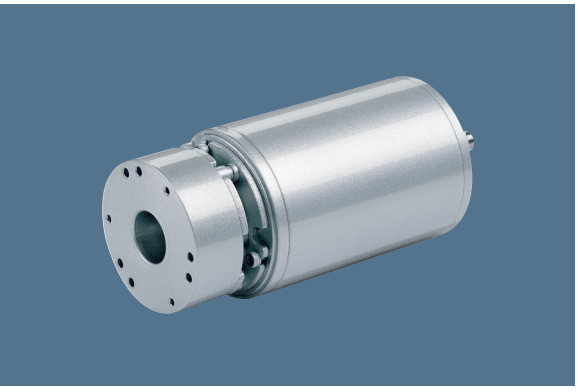

- Open mounting of the module to the motor B side
- Holding brake with emergency stop function
- Spring applied braking torque, released electromagnetically
- Single-disk brake with 2 friction contact surfaces

Type		BFK
Nominal voltage	V DC	24 +/– 10 %
Rated output	W	9
Braking torque	Nm	0,5
Mass	kg	0,4
Closing time	ms	12,5
Opening time	ms	18
Protection class		IP 00

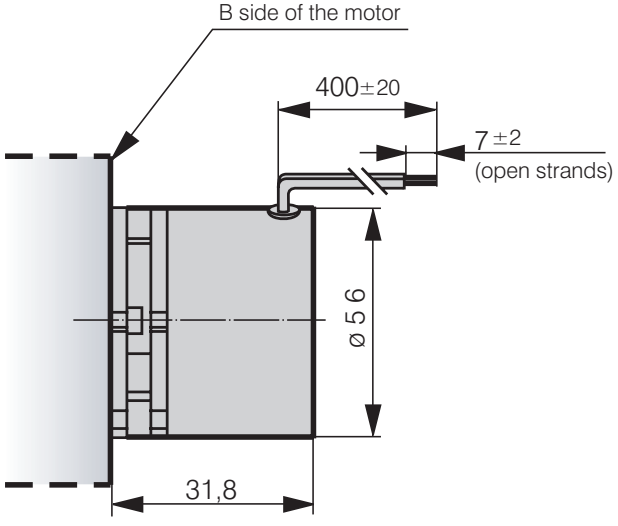

ebmpapst

ECI brake module integrated

High torque permanent magnet brake

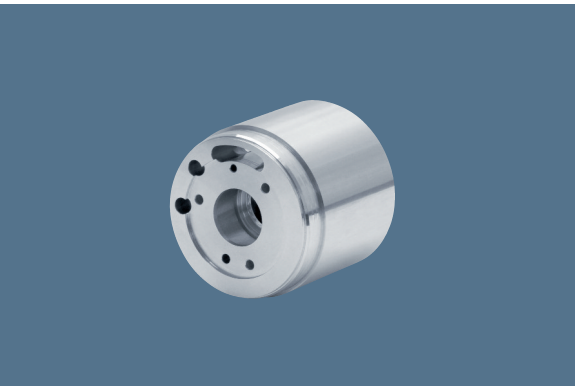

- Module assembled between basic motor and electronics module
- Holding brake with limited emergency stop function
- Optimized magnetic design with high power density
- Braking torque is generated by a permanent magnetic field and is released electromagnetically
- Free of residual torque and play
- Reduced mass inertia for optimum dynamics

Type	High Torque	
Nominal voltage	V DC	24 +/– 10 %
Rated output	W	9
Braking torque	Nm	2
Mass moment of inertia	kgm^2	9×10^{-6}
Closing time	ms	20
Opening time	ms	35
Protection class		IP 54 (for built-in module)

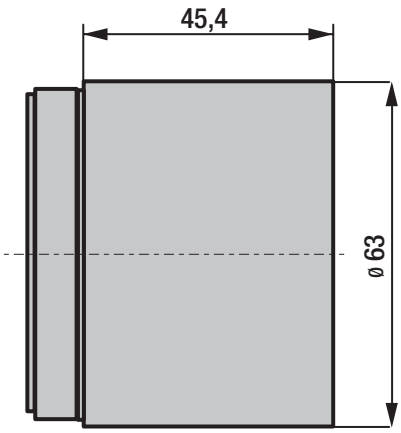

ECI 63 with electronics K5

Commissioning accessories

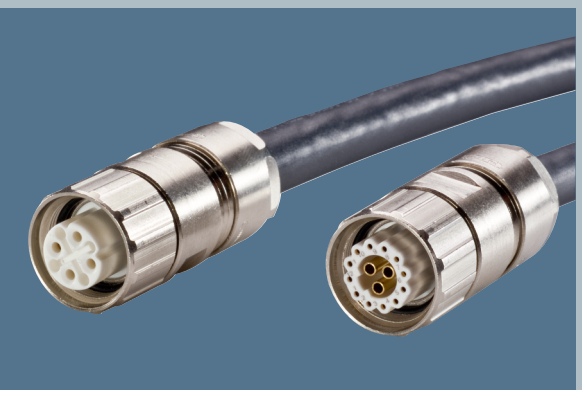

Power cable and logic cable

- All cables available in 3 standard lengths.
- Connecting cable for power supply available in 2 versions.
- Version 1 with CANopen for operating single drives at a CANopen interface.
- Version 2 without CANopen for integration of multiple drives on a CANopen network via separate CANopen wires.
- Connecting cable for logic interface for separate logic power supply and for wiring the analogue and digital I/Os.

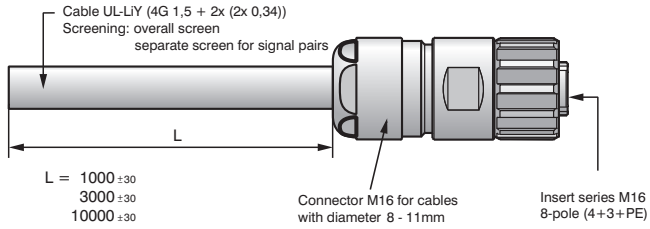

Order No. (1000 mm)	= 992 0160 002
Order No. (3000 mm)	= 992 0160 005
Order No. (10000 mm)	= 992 0160 008

Strand	Pin		
brown	Pin A	U_ZK	Power supply
grey	Pin B	Ballast/Break	Ballast resistor / brake connection
black	Pin C	GND power	Power supply
yellow/green	Pin PE	PE	Earthing (on motor housing)
white	Pin 1	CAN_H	CAN-Bus high signal
brown	Pin 2	CAN_L	CAN-Bus low signal
green	Pin 3	Enable	24 V
yellow	Pin 4	Digital I/0 9	NPN / PNP 24 V

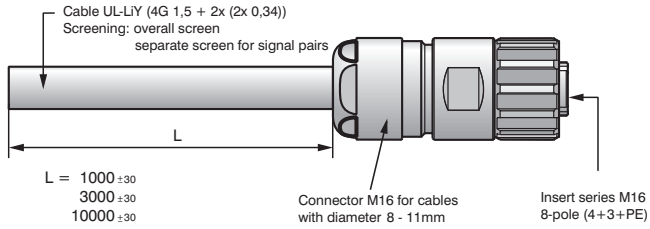

Order No. (1000 mm)	= 992 0160 003
Order No. (3000 mm)	= 992 0160 006
Order No. (10000 mm)	= 992 0160 009

Strand	Pin		
brown	Pin A	U_ZK	Power supply
grey	Pin B	Ballast/Break	Ballast resistor / brake connection
black	Pin C	GND power	Power supply
yellow/green	Pin PE	PE	Earthing (on motor housing)
	Pin 1	n.c.	
	Pin 2	n.c.	
green	Pin 3	Enable	24 V
yellow	Pin 4	Digital I/0 9	NPN / PNP 24 V

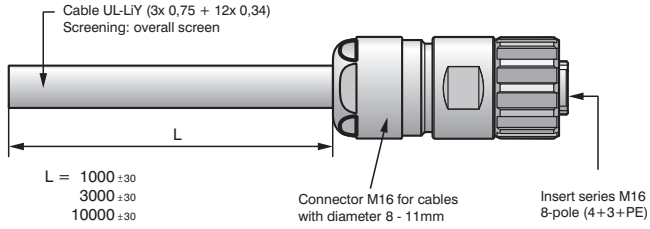

Order No. (1000 mm)	= 992 0160 004
Order No. (3000 mm)	= 992 0160 007
Order No. (10000 mm)	= 992 0160 010

Strand	Pin		
white	Pin 1	Digital / 01	PNP 24
brown	Pin 2	Digital / 02	PNP 24
green	Pin 3	Digital / 03	PNP 24
yellow	Pin 4	Digital / 04	PNP 24
grey	Pin 5	Digital / 05	PNP 24
pink	Pin 6	Digital / 06	PNP 24
blue	Pin 7	Digital / 07	PNP 24
red	Pin 8	Digital / 08	PNP 24
black	Pin 9	Digital / 09	NPN / PNP 24 V
violet	Pin 10	Enable	24 V
grey/pink	Pin 11	Analog IN 1	0 to 10V
red/blue	Pin 12	Analog IN 2	0 to 10V
grey	Pin A	Analog GND	GND Analog
brown	Pin B	Uc	Logic power supply + (24V)
black	Pin C	GND	Logic power supply - (GND)

ECI 63 with electronics K5

Commissioning accessories

Power cable and logic cable

- All cables available in 3 standard lengths.
- Connecting cable for power supply available in 2 versions.
- Version 1 with CANopen for operating single drives at a CANopen interface.
- Version 2 without CANopen for integration of multiple drives on a CANopen network via separate CANopen wires.
- Connecting cable for logic interface for separate logic power supply and for wiring the analogue and digital I/Os.

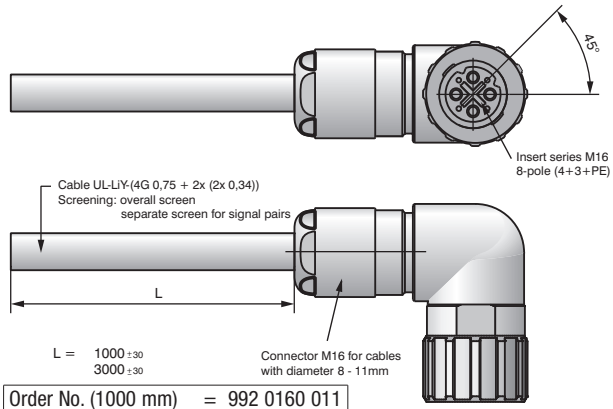

Order No. (1000 mm)	= 992 0160 011
Order No. (3000 mm)	= 992 0160 014

Strand	Pin		
brown	Pin A	U_ZK	Power supply
grey	Pin B	Ballast/Break	Ballast resistor / brake connection
black	Pin C	GND power	Power supply
yellow/green	Pin PE	PE	Earthing (on motor housing)
white	Pin 1	CAN_H	CAN-Bus high signal
brown	Pin 2	CAN_L	CAN-Bus low signal
green	Pin 3	Enable	24 V
yellow	Pin 4	Digital I/0 9	NPN / PNP 24 V

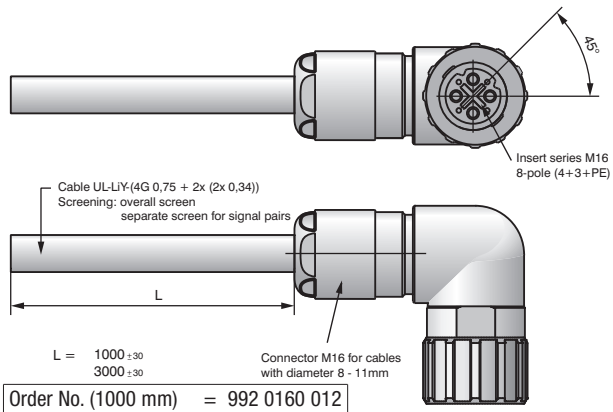

Order No. (1000 mm)	= 992 0160 012
Order No. (3000 mm)	= 992 0160 015

Strand	Pin		
brown	Pin A	U_ZK	Power supply
grey	Pin B	Ballast/Break	Ballast resistor / brake connection
black	Pin C	GND power	Power supply
yellow/green	Pin PE	PE	Earthing (on motor housing)
	Pin 1	n.c.	
	Pin 2	n.c.	
green	Pin 3	Enable	24 V
yellow	Pin 4	Digital I/0 9	NPN / PNP 24 V

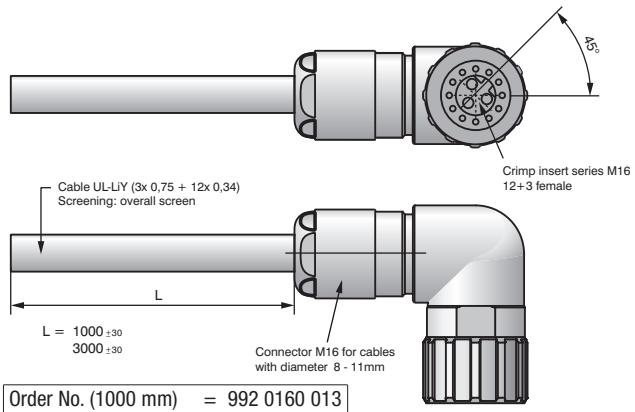

Order No. (1000 mm)	= 992 0160 013
Order No. (3000 mm)	= 992 0160 016

Strand	Pin		
white	Pin 1	Digital / 01	PNP 24
brown	Pin 2	Digital / 02	PNP 24
green	Pin 3	Digital / 03	PNP 24
yellow	Pin 4	Digital / 04	PNP 24
grey	Pin 5	Digital / 05	PNP 24
pink	Pin 6	Digital / 06	PNP 24
blue	Pin 7	Digital / 07	PNP 24
red	Pin 8	Digital / 08	PNP 24
black	Pin 9	Digital / 09	NPN / PNP 24 V
violet	Pin 10	Enable	24 V
grey/pink	Pin 11	Analog IN 1	0 to 10V
red/blue	Pin 12	Analog IN 2	0 to 10V
grey	Pin A	Analog GND	GND Analog
brown	Pin B	Uc	Logic power supply + (24V)
black	Pin C	GND	Logic power supply - (GND)

ECI 63 with electronics K5

Commissioning accessories

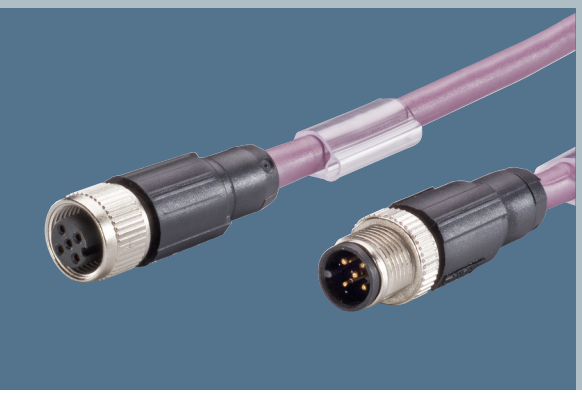

CANopen connection cable and adaptor lead

- For connecting individual drives or networking multiple drives to be operated via the CANopen interface.
- Connection and output cable in 5m length.
- Adapter cable in 2m length.
- Use of standardised M12 plug and cable from Phoenix Contact.

CAN-Bus twisted pair connecting cable / screened (Phoenix Contact No. 1507557)

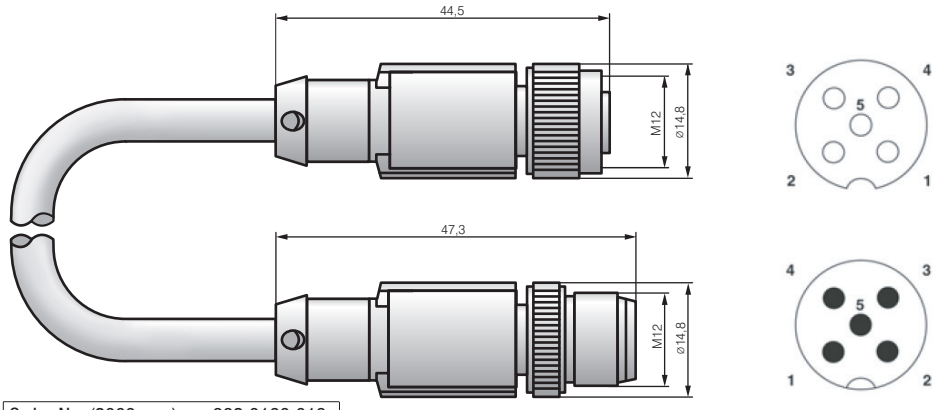

Order No. (2000 mm) = 992 0160 019

Socket M12 x 1, straight, screened

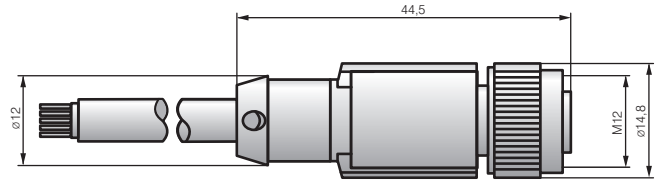

Order No. (5000 mm) = 992 0160 017

(Phoenix Contact No. 1507489)
Sensor/actuator cable for CAN_OUT, 5-pole, PUR halogen-free black, screened, free cable end to straight socket M12

Pin	Function	Description	Colour
1	SH	shield	
2	V+	CAN supply	red
3	GND	Ground	black
4	CAN_H	CAN-Bus high signal	white
5	CAN_L	CAN-Bus low signal	blue

Plug M12 x 1, straight, screened

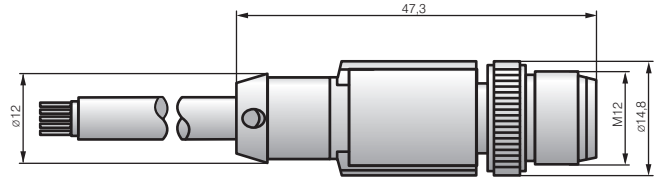

Order No. (5000 mm) = 992 0160 018

(Phoenix Contact No. 1507434)
Sensor/actuator cable for CAN_OUT, 5-pole, PUR halogen-free black, screened, free cable end to straight plug M12

Pin	Function	Description	Colour
1	SH	shield	
2	V+	CAN supply	red
3	GND	Ground	black
4	CAN_H	CAN-Bus high signal	white
5	CAN_L	CAN-Bus low signal	blue

ebmpapst

Electronics K5 commissioning accessories

PC commissioning tool, CANopen adapter and small parts

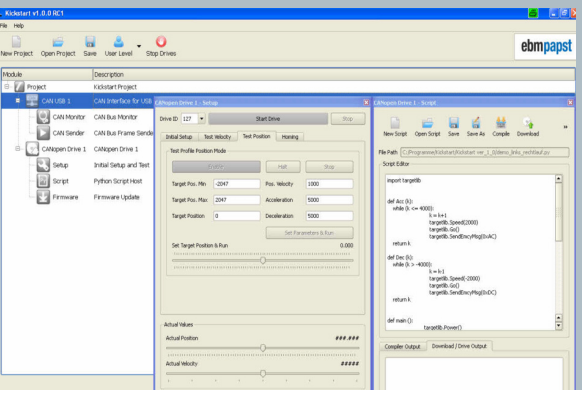

- Windows-based PC commissioning tool for all drives of electronics class K5 with CANopen communication interface.
- Quick and intuitive operation and commissioning of the drives.
- Range of function based on the possibilities of the CiA Drives Profile DSP 402.
- Commissioning, parameter configuration, programming (via interpreter) and monitoring of drives via CANopen communication interface.
- Can be run on all common software platforms (e.g. Windows 2000, Windows XP, Windows Vista, Windows 7) directly from USB stick (automatic hardware detection and driver installation necessary).

SAC-5P-M12MS CAN TR

(Phoenix No. 1507816)

Order No. = 992 0160 021

CANopen terminal plug with integrated 120 Ohm terminating resistor.

PROT-M12 SH

(Phoenix No. 1503302)

Order No. = 992 0160 023

M12 metal cap for plug connectors with internal thread for reliably sealing off the CAN-out terminal when not in use.

PROT-M12 FS-M

(Phoenixm No. 1430488)

Order No. = 992 0160 022

M12 metal cap for plug connectors with external thread for reliably sealing off the CAN-in terminal when not in use.

M 16 metal cap

(Hummel No. 7010900162)

Order No. = 992 0160 024

Brass protective cap for plug connectors with external thread.

CAN to USB adapter for commissioning motors of class K5 via a computer with commissioning software and CANopen bus system.

Order No. = 914 0000 000

Function	Description
CAN speed	CAN high speed (up to 1 Mbit/s)
CAN signals	CAN_H, CAN_L, CAN_GND, CAN_V+, GND
CAN plug	DB9 plug
USB interface	USB 2.0 Full Speed
USB output	Max. 1 W/max. 200 mA via USB port
USB plug	USB Type B socket
Permitted ambient temp. range	0 … 60 °C
Mass	50 g
Dimensions (L x B x H)	58 x 50 x 23 mm

Adapter cable for connecting the CAN-to-USB adapter to a CANopen drive or a CANopen network via M12 plug CAN-in.

Order No. = 992 0160 020

Configuration: M12: as Phoenix No. 1507476
Configuration SUB-D-female: Table - pinning for 9-pin D-sub connector

M12	SUB-D	Signal	Description
5	2	CAN_L	CAN_L bus line
3	n.c.		
1	housing	(CAN_SHIELD)	CAN Shield
4	7	CAN_H	CAN_H bus line (dominant hight)
2	n.c.		